Минск +375447584780 Viber email minsk17@tut.by
www.fotorele.net www.tiristor.by tel.+375 29 758 47 80 мтс

каталог, описание, технические, характеристики, datasheet, параметры, маркировка, габариты, фото, семикрон, semikron, мост, диодный, однофазный, трехфазный, igbt, модуль. starpower,

КАТАЛОГ STARPOWER 2022 МИНСК

модуль, igbt, мост диодный

купить, продажа

Электронные компоненты, радиодетали

где и как купить в Минске?

Категория: **модуль starpower, igbt, мост диодный**

PRODUCT CATEGORIES

Low power modules
Medium Power modules
High Power modules
SIC
Discrete parts
Automotive IGBT Modules
Automotive SiC Modules

	L2.1			
	Package	**Current (A)**	**Voltage (V)**	**Classification**
GD200HFY65C1S	C1.0	A	V	Trench FS IGBT, Low Loss
GD200HFQ120C2S	C2.0	A	V	Advanced Trench FS Fast IGBT
GD20PHX65L2S	L2.0	A	V	Trench FS IGBT, Low Loss
GD150HHU120C6SF	C6.4	A	V	NPT Ultra Fast IGBT

	L2.1			
	Package	**Current (A)**	**Voltage (V)**	**Classification**
DG10X12T2	TO-247	10 A	1200 V	Advanced Trench FS Fast IGBT
DG10X06T1	TO-220	10 A	650 V	Trench FS IGBT, Low Loss
GD10PJY120L1S	L1.2	10 A	1200 V	Advanced Trench FS IGBT, Low L
GD10PJY120L2S	L2.2	10 A	1200 V	Advanced Trench FS IGBT, Low L
GD10PJK120L1S	L1.2	10 A	1200 V	NPT Low Loss
GD10PJK120L2S	L2.2	10 A	1200 V	NPT Low Loss
GD10PJY120F1S	F1.1	10 A	1200 V	Advanced Trench FS IGBT, Low L
GD10PJY120F3S	F3.0	10 A	1200 V	Advanced Trench FS IGBT, Low L
GD10PJY120F4S	F4.1	10 A	1200 V	Advanced Trench FS IGBT, Low L
GD10PJK120F1S	F1.1	10 A	1200 V	NPT Low Loss
GD10PJK120F3S	F3.0	10 A	1200 V	NPT Low Loss

	L2.1			
	Package	**Current (A)**	**Voltage (V)**	**Classification**
GD10PJK120F4S	F4.1	10 A	1200 V	NPT Low Loss
GD10PIY120C5S	C5.0	10 A	1200 V	Advanced Trench FS IGBT, Low L
GD10PIK120C5S	C5.0	10 A	1200 V	NPT Low Loss
GD10FSX65L4S	L4.0	10 A	650 V	Trench FS IGBT, Low Loss
GD10PJX65L2S	L2.2	10 A	650 V	Trench FS IGBT, Low Loss
GD10PJX65F1S	F1.1	10 A	650 V	Trench FS IGBT, Low Loss
GD10FFK120C5SP	C5.6 PF	10 A	1200 V	NPT Low Loss
GD10PJX65L1S	L1.0	10 A	650 V	Trench FS IGBT, Low Loss
DG15X06T1	TO-220	15 A	650 V	Trench FS IGBT, Low Loss
GD15PJY120L1S	L1.2	15 A	1200 V	Advanced Trench FS IGBT, Low L
DG15X12T2	TO-247	15 A	1200 V	Trench FS IGBT, Low Loss
GD15PJY120L2S	L2.2	15 A	1200 V	Advanced Trench FS IGBT, Low L

	L2.1			
	Package	**Current (A)**	**Voltage (V)**	**Classification**
GD15PJK120L1S	L1.2	15 A	1200 V	NPT Low Loss
GD15PJY120F1S	F1.1	15 A	1200 V	Advanced Trench FS IGBT, Low L
GD15PJY120F2S	F2.0	15 A	1200 V	Advanced Trench FS IGBT, Low L
GD15PJY120F3S	F3.0	15 A	1200 V	Advanced Trench FS IGBT, Low L
GD15PJY120F4S	F4.1	15 A	1200 V	Advanced Trench FS IGBT, Low L
GD15PJY120F5S	F5.1	15 A	1200 V	Advanced Trench FS IGBT, Low L
GD15PIY120C5S	C5.0	15 A	1200 V	Advanced Trench FS IGBT, Low L
GD15PIK120C5S	C5.0	15 A	1200 V	NPT Low Loss
GD15FSX65L4S	L4.0	15 A	650 V	Trench FS IGBT, Low Loss
GD15PJX65L2S	L2.2	15 A	650 V	Trench FS IGBT, Low Loss

	L2.1			
	Package	**Current (A)**	**Voltage (V)**	**Classification**
GD15PJX65F1S	F1.1	15 A	650 V	Trench FS IGBT, Low Loss
GD15PJK120F2S	F2.0	15 A	1200 V	NPT Low Loss
GD15PJK120F5S	F5.1	15 A	1200 V	NPT Low Loss
GD15FFK120C5SP	C5.6 PF	15 A	1200 V	NPT Low Loss
GD15PHX120L2S	L2.0	15 A	1200 V	Trench FS IGBT, Low Loss
DG20X06T1	TO-220	20 A	650 V	Trench FS IGBT, Low Loss
DG20X06T2	TO-247	20 A	650 V	Trench FS IGBT, Low Loss
GD20FSX65L4S	L4.0	20 A	650 V	Trench FS IGBT, Low Loss
GD20FSX65L2S	L2.1	20 A	650 V	Trench FS IGBT, Low Loss
GD20PJX65L2S	L2.2	20 A	650 V	Trench FS IGBT, Low Loss
GD20PJX65F1S	F1.1	20 A	650 V	Trench FS IGBT, Low Loss
GD20PJX65F3S	F3.0	20 A	650 V	Trench FS IGBT, Low Loss

	L2.1			
	Package	**Current (A)**	**Voltage (V)**	**Classification**
GD20PJX65L1S	L1.2	20 A	650 V	Trench FS IGBT, Low Loss
GD25FSY120L2S	L2.1	25 A	1200 V	Advanced Trench FS IGBT, Low L
GD25PJY120L3S	L3.0	25 A	1200 V	Advanced Trench FS IGBT, Low L
DG25X12T2	TO-247	25 A	1200 V	Trench FS IGBT, Low Loss
GD25PJY120F2S	F2.0	25 A	1200 V	Advanced Trench FS IGBT, Low L
GD25PJY120F5S	F5.1	25 A	1200 V	Advanced Trench FS IGBT, Low L
GD25PIY120C5S	C5.0	25 A	1200 V	Advanced Trench FS IGBT, Low L
GD25PIY120C5SNF	C5.3 PF	25 A	1200 V	Advanced Trench FS IGBT, Low L
GD25PIY120C5SN	C5.3	25 A	1200 V	Advanced Trench FS IGBT, Low L
GD25PIK120C5S	C5.0	25 A	1200 V	NPT Low Loss
GD25FFK120C5SP	C5.6	25 A	1200 V	NPT Low Loss
GD25FFK120C5SP	C5.6 PF	25 A	1200 V	NPT Low Loss

	L2.1			
	Package	**Current (A)**	**Voltage (V)**	**Classification**
DG30X06T2	TO-247	30 A	650 V	Trench FS IGBT, Low Loss
DG30X07T2	TO-247	30 A	750 V	Trench FS IGBT, Low Loss
GD30FSX65L2S	L2.1	30 A	650 V	Trench FS IGBT, Low Loss
GD30PJX65L2S	L2.2	30 A	650 V	Trench FS IGBT, Low Loss
GD30PJX65F1S	F1.1	30 A	650 V	Trench FS IGBT, Low Loss
GD30PJX65F3S	F3.0	30 A	650 V	Trench FS IGBT, Low Loss
GD30PIX65C5S	C5.0	30 A	650 V	Trench FS IGBT, Low Loss
GD35FSY120L2S	L2.1	35 A	1200 V	Advanced Trench FS IGBT, Low L
GD35PJY120L3S	L3.0	35 A	1200 V	Advanced Trench FS IGBT, Low L
GD35PJY120F2S	F2.0	35 A	1200 V	Advanced Trench FS IGBT, Low L
GD35PJY120F5S	F5.1	35 A	1200 V	Advanced Trench FS IGBT, Low L

	Package	Current (A)	Voltage (V)	Classification
GD35PIY120C5SNF	C5.3 PF	35 A	1200 V	Advanced Trench FS IGBT, Low L
GD35PIY120C5SN	C5.3	35 A	1200 V	Advanced Trench FS IGBT, Low L
DG40F12T2	TO-247	40 A	1200 V	Trench IGBT, FAST
DG40Q12T2LZ	TO-247	40 A	1200 V	Advanced Trench FS Fast IGBT
DG40X12T2	TO-247	40 A	1200 V	Trench FS IGBT, Low Loss
GD40PIY120C5S	C5.0	40 A	1200 V	Advanced Trench FS IGBT, Low L
GD40TLQ120F1S	F1.2	40 A	1200 V	Advanced Trench FS Fast IGBT
GD40PIK120C5S	C5.0	40 A	1200 V	NPT Low Loss
GD50FSY120L3S	L3.2	50 A	1200 V	Advanced Trench FS IGBT, Low L
GD50HFY120C1S	C1.0	50 A	1200 V	Advanced Trench FS IGBT, Low L
DG50X06T2	TO-247	50 A	650 V	Trench FS IGBT, Low Loss
DG50X07T2	TO-247	50 A	750 V	Trench FS IGBT, Low Loss
DG50X12T2	TO-247 Plus	50 A	1200 V	Trench FS IGBT, Low Loss
DG50Q12T2	TO-247 Plus	50 A	1200 V	Advanced Trench FS Fast IGBT

	Package	Current (A)	Voltage (V)	Classification
DG50X12T3	T0-264	50 A	1200 V	Trench FS IGBT, Low Loss
GD50HFK120C1S	C1.0	50 A	1200 V	NPT Low Loss
GD50HFU120C1S	C1.0	50 A	1200 V	NPT Ultra Fast IGBT
GD50HHU120C5S	C5.4	50 A	1200 V	NPT Ultra Fast IGBT
GD50FFY120C5S	C5.2	50 A	1200 V	Advanced Trench FS IGBT, Low L
GD50PIY120C5SNF	C5.3 PF	50 A	1200 V	Advanced Trench FS IGBT, Low L
GD50HCU120C8S	C8.2	50 A	1200 V	NPT Ultra Fast IGBT
GD50PIY120C5SN	C5.3	50 A	1200 V	Advanced Trench FS IGBT, Low L
GD50PIY120C6S	C6.0	50 A	1200 V	Advanced Trench FS IGBT, Low L
GD50PIY120C6SN	C6.3	50 A	1200 V	Advanced Trench FS IGBT, Low L
	C1.0	50 A	650 V	Trench FS IGBT, Low Loss

	L2.1			
	Package	**Current (A)**	**Voltage (V)**	**Classification**
GD50HFX65C1S				
GD50PIK120C6S	C6.0	50 A	1200 V	NPT Low Loss
GD50FSX65L2S	L2.1	50 A	650 V	Trench FS IGBT, Low Loss
GD50FSX65L2SF	L2.6	50 A	650 V	Trench FS IGBT, Low Loss
GD50PJX65L3S	L3.0	50 A	650 V	Trench FS IGBT, Low Loss
GD50HFX170C1S	C1.0	50 A	1700 V	Trench FS IGBT, Low Loss
GD50TUX65F1S	F1.3	50 A	650 V	Trench FS IGBT, Low Loss
GD50MLX65F1S	F1.2	50 A	650 V	Trench FS IGBT, Low Loss
GD50FFX65C5S	C5.2	50 A	650 V	Trench FS IGBT, Low Loss
GD50PIX65C5S	C5.0	50 A	650 V	Trench FS IGBT, Low Loss
GD50FFK120C5SP	C5.6	50 A	1200 V	NPT Low Loss
GD50PIX170C6S	C6.0	50 A	1700 V	Trench FS IGBT, Low Loss

	L2.1			
	Package	**Current (A)**	**Voltage (V)**	**Classification**
GD50FFK120C5SP	C5.6 PF	50 A	1200 V	NPT Low Loss
GD50PIX120C5SN	C5.3	50 A	1200 V	Trench FS IGBT, Low Loss
GD75FSY120L3S	L3.2	75 A	1200 V	Advanced Trench FS IGBT, Low L
GD75HFY120C1S	C1.0	75 A	1200 V	Advanced Trench FS IGBT, Low L
DG75Q12T2	TO-247 Plus	75 A	1200 V	Advanced Trench FS Fast IGBT
DG75X12T3	T0-264	75 A	1200 V	Trench FS IGBT, Low Loss
GD75HFK120C1S	C1.0	75 A	1200 V	NPT Low Loss
DG75X07T2L	TO-247 Plus	75 A	750 V	Trench FS IGBT, Low Loss
DG75X12T2	TO-247 Plus	75 A	1200 V	Trench FS IGBT, Low Loss
GD75HFU120C1S	C1.0	75 A	1200 V	NPT Ultra Fast IGBT
GD75HHU120C5S	C5.4	75 A	1200 V	NPT Ultra Fast IGBT
GD75FFY120C5S	C5.2	75 A	1200 V	Advanced Trench FS IGBT, Low L
GD75FFY120C6SF	C6.2 PF	75 A	1200 V	Advanced Trench FS IGBT, Low L

	Package	Current (A)	Voltage (V)	Classification
GD75FFY120C6S	C6.2	75 A	1200 V	Advanced Trench FS IGBT, Low L
GD75HCU120C8S	C8.2	75 A	1200 V	NPT Ultra Fast IGBT
GD75PIY120C6S	C6.0	75 A	1200 V	Advanced Trench FS IGBT, Low L
GD75PIY120C6SN	C6.3	75 A	1200 V	Advanced Trench FS IGBT, Low L
GD75PIY120C6SNF	C6.3 PF	75 A	1200 V	Advanced Trench FS IGBT, Low L
GD75HFX65C1S	C1.0	75 A	650 V	Trench FS IGBT, Low Loss
GD75MLX65L3S	L3.1	75 A	650 V	Trench FS IGBT, Low Loss
GD75HFX170C1S	C1.0	75 A	1700 V	Trench FS IGBT, Low Loss
GD75FFX65C5S	C5.2	75 A	650 V	Trench FS IGBT, Low Loss
GD75PIX65C6S	C6.0	75 A	650 V	Trench FS IGBT, Low Loss

	L2.1			
	Package	**Current (A)**	**Voltage (V)**	**Classification**
GD75FFK120C6S	C6.2	75 A	1200 V	NPT Low Loss
GD75FFX170C6S	C6.2	75 A	1700 V	Trench FS IGBT, Low Loss
GD75PIX170C6S	C6.0	75 A	1700 V	Trench FS IGBT, Low Loss
GD75CLX65C1S	C1.0	75 A	650 V	Trench FS IGBT, Low Loss
GD75CUX65C1S	C1.0	75 A	650 V	Trench FS IGBT, Low Loss
GD80TLQ120F1S	F1.2	80 A	1200 V	Advanced Trench FS Fast IGBT
DG100X07T2	TO-247 Plus	100 A	750 V	Trench FS IGBT, Low Loss
GD100HFY120C1S	C1.0	100 A	1200 V	Advanced Trench FS IGBT, Low L
GD100HFY120C2S	C2.0	100 A	1200 V	Advanced Trench FS IGBT, Low L
GD100HFY120C8S	C8.0	100 A	1200 V	Advanced Trench FS IGBT, Low L
	C1.0	100 A	1200 V	NPT Low Loss

	L2.1			
	Package	**Current (A)**	**Voltage (V)**	**Classification**
GD100HFK120C1S				
GD100HFK120C2S	C2.0	100 A	1200 V	NPT Low Loss
GD100HFU120C1S	C1.0	100 A	1200 V	NPT Ultra Fast IGBT
GD100HHU120C6S	C6.4	100 A	1200 V	NPT Ultra Fast IGBT
GD100HFU120C2S	C2.0	100 A	1200 V	NPT Ultra Fast IGBT
GD100FFY120C5S	C5.2	100 A	1200 V	Advanced Trench FS IGBT, Low L
GD100FFY120C6SF	C6.2 PF	100 A	1200 V	Advanced Trench FS IGBT, Low L
GD100HFU120C8S	C8.0	100 A	1200 V	NPT Ultra Fast IGBT
GD100CUY120C1S	C1.0	100 A	1200 V	Advanced Trench FS IGBT, Low L
GD100FFY120C6S	C6.2	100 A	1200 V	Advanced Trench FS IGBT, Low L
	C1.0	100 A	1200 V	Advanced Trench FS IGBT, Low L

	Package	Current (A)	Voltage (V)	Classification
GD100CLY120C1S				
GD100CUY120C2S	C2.0	100 A	1200 V	Advanced Trench FS IGBT, Low L
GD100CLY120C2S	C2.0	100 A	1200 V	Advanced Trench FS IGBT, Low L
GD100PIY120C6SNF	C6.3 PF	100 A	1200 V	Advanced Trench FS IGBT, Low L
GD100PIY120C6SN	C6.3	100 A	1200 V	Advanced Trench FS IGBT, Low L
GD100HFX65C1S	C1.0	100 A	650 V	Trench FS IGBT, Low Loss
GD100MLX65L3S	L3.1	100 A	650 V	Trench FS IGBT, Low Loss
GD100HFX170C1S	C1.0	100 A	1700 V	Trench FS IGBT, Low Loss
GD100HFX170C2S	C2.0	100 A	1700 V	Trench FS IGBT, Low Loss
GD100FFX65C5S	C5.2	100 A	650 V	Trench FS IGBT, Low Loss
	C6.0	100 A	650 V	Trench FS IGBT, Low Loss

	L2.1			
	Package	**Current (A)**	**Voltage (V)**	**Classification**
GD100PIX65C6S				
GD100FFK120C6S	C6.2	100 A	1200 V	NPT Low Loss
GD100FTY120C6S	C6.0	100 A	1200 V	Advanced Trench FS IGBT, Low L
GD100GTY120C6S	C6.1	100 A	1200 V	Trench FS IGBT, Low Loss
GD100FTY120C6S	C6	100 A	1200 V	Advanced Trench FS IGBT, Low L
GD100FFY120C6S_B29	C6.2	100 A	1200 V	Advanced Trench FS IGBT, Low L
MD120HFR120C2S	C2.0	120 A	1200 V	SiC MOSFET
DG120X07T2	TO-247 Plus	120 A	750 V	Trench FS IGBT, Low Loss
GD150HFY120C1S	C1.0	150 A	1200 V	Advanced Trench FS IGBT, Low L
GD150HFY120C2S	C2.0	150 A	1200 V	Advanced Trench FS IGBT, Low L
GD150HFY120C8S	C8.0	150 A	1200 V	Advanced Trench FS IGBT, Low L

	L2.1			
	Package	**Current (A)**	**Voltage (V)**	**Classification**
GD150HFY120C8SN	C8.1	150 A	1200 V	Advanced Trench FS IGBT, Low L
GD150HFK120C2S	C2.0	150 A	1200 V	NPT Low Loss
GD150HFU120C2S	C2.0	150 A	1200 V	NPT Ultra Fast IGBT
GD150FFY120C6SF	C6.2 PF	150 A	1200 V	Advanced Trench FS IGBT, Low L
GD150HFU120C8S	C8.0	150 A	1200 V	NPT Ultra Fast IGBT
GD150CUY120C1S	C1.0	150 A	1200 V	Advanced Trench FS IGBT, Low L
GD150FFY120C6S	C6.2	150 A	1200 V	Advanced Trench FS IGBT, Low L
GD150CLY120C1S	C1.0	150 A	1200 V	Advanced Trench FS IGBT, Low L
GD150CUY120C2S	C2.0	150 A	1200 V	Advanced Trench FS IGBT, Low L
GD150CLY120C2S	C2.0	150 A	1200 V	Advanced Trench FS IGBT, Low L

	L2.1			
	Package	**Current (A)**	**Voltage (V)**	**Classification**
GD150PIY120C6SN	C6.3	150 A	1200 V	Advanced Trench FS IGBT, Low L
GD150HFX65C1S	C1.0	150 A	650 V	Trench FS IGBT, Low Loss
GD150MLX65L3S	L3.1	150 A	650 V	Trench FS IGBT, Low Loss
GD150HFX170C2S	C2.0	150 A	1700 V	Trench FS IGBT, Low Loss
GD150HFU120C6S	C6.1	150 A	1200 V	NPT Ultra Fast IGBT
GD150FFX65C6S	C6.2	150 A	650 V	Trench FS IGBT, Low Loss
GD150HFU120C6S (1)	C6.1	150 A	1200 V	NPT Ultra Fast IGBT
GD150HHU120C6S	C6.4	150 A	1200 V	NPT Ultra Fast IGBT
GD150FFX170C6S	C6.2	150 A	1700 V	Trench FS IGBT, Low Loss
GD150CUX65C1S	C1.0	150 A	650 V	Trench FS IGBT, Low Loss

	L2.1			
	Package	**Current (A)**	**Voltage (V)**	**Classification**
GD150GTY120C6S	C6.1	150 A	1200 V	Trench FS IGBT, Low Loss
GD200FFX65P3S	P3.0	200 A	650 V	Trench FS IGBT, Low Loss
MD200HFR120C2S	C2.0	200 A	1200 V	SiC MOSFET
GD200HFY120C2S	C2.0	200 A	1200 V	Advanced Trench FS IGBT, Low L
GD200HFY120C8S	C8.0	200 A	1200 V	Advanced Trench FS IGBT, Low L
GD200HFK120C2S	C2.0	200 A	1200 V	NPT Low Loss
GD200HFU120C2S	C2.0	200 A	1200 V	NPT Ultra Fast IGBT
GD200FFY120C6SF	C6.2 PF	200 A	1200 V	Advanced Trench FS IGBT, Low L
GD200FFY120C6S	C6.2	200 A	1200 V	Advanced Trench FS IGBT, Low L
GD200CUY120C2S	C2.0	200 A	1200 V	Advanced Trench FS IGBT, Low L

	Package	Current (A)	Voltage (V)	Classification
GD200CLX65C2S	C2.0	200 A	650 V	Trench FS IGBT, Low Loss
GD200HFX65C1S	C1.0	200 A	650 V	Trench FS IGBT, Low Loss
GD200HFX65C2S	C2.0	200 A	650 V	Trench FS IGBT, Low Loss
GD200HFX65C8S	C8.0	200 A	650 V	Trench FS IGBT, Low Loss
GD200HFX170C2S	C2.0	200 A	1700 V	Trench FS IGBT, Low Loss
GD200FFX65C6S	C6.2	200 A	650 V	Trench FS IGBT, Low Loss
GD200CEY120C2S	C2.0	200 A	1200 V	Advanced Trench FS IGBT, Low L
GD200SGY120C2S	C2.1	200 A	1200 V	Advanced Trench FS IGBT, Low L
GD200TLY120L3S	L3	200 A	1200 V	Advanced Trench FS IGBT, Low L
GD225HFY120C6S	C6.1 Black	225 A	1200 V	Advanced Trench FS IGBT, Low L

	L2.1			
	Package	**Current (A)**	**Voltage (V)**	**Classification**
GD225HTY120C7S	C7.0	225 A	1200 V	Advanced Trench FS IGBT, Low L
GD225HFX170C6S	C6.1	225 A	1700 V	Trench FS IGBT, Low Loss
MD250HFR170C2S	C2.0	250 A	1700 V	SiC MOSFET
GD300SGY120C2S	C2.1	300 A	1200 V	Advanced Trench FS IGBT, Low L
GD300FFX65P3S	P3.0	300 A	650 V	Trench FS IGBT, Low Loss
MD300HFC120C2S	C2.0	300 A	1200 V	SiC MOSFET
MD300HFC170C2S	C2.0	300 A	1700 V	SiC MOSFET
MD300HFR120C2S	C2.0	300 A	1200 V	SiC MOSFET
GD300HFY120C2S	C2.0	300 A	1200 V	Advanced Trench FS IGBT, Low L
GD300HFK120C2S	C2.0	300 A	1200 V	NPT Low Loss

	L2.1			
	Package	**Current (A)**	**Voltage (V)**	**Classification**
GD300HFU120C2S	C2.0	300 A	1200 V	NPT Ultra Fast IGBT
GD300CUY120C2S	C2.0	300 A	1200 V	Advanced Trench FS IGBT, Low L
GD300CLY120C2S	C2.0	300 A	1200 V	Advanced Trench FS IGBT, Low L
GD300HFY120C6S	C6.1 Black	300 A	1200 V	Advanced Trench FS IGBT, Low L
GD300HTY120C7S	C7.0	300 A	1200 V	Advanced Trench FS IGBT, Low L
GD300HFX65C2S	C2.0	300 A	650 V	Trench FS IGBT, Low Loss
GD300HFX65C8S	C8.0	300 A	650 V	Trench FS IGBT, Low Loss
GD300HFX65C8SN	C8.1	300 A	650 V	Trench FS IGBT, Low Loss
GD300HFX170C2S	C2.0	300 A	1700 V	Trench FS IGBT, Low Loss
GD300HFX65C6S	C6.1	300 A	650 V	Trench FS IGBT, Low Loss

	L2.1			
	Package	**Current (A)**	**Voltage (V)**	**Classification**
GD300HFU120C6S	C6.1	300 A	1200 V	NPT Ultra Fast IGBT
GD300MPY120C6S	C6.1	300 A	1200 V	Advanced Trench FS IGBT, Low L
GD300MNY120C6S	C6.1	300 A	1200 V	Advanced Trench FS IGBT, Low L
GD300HFX170C6S	C6.1	300 A	1700 V	Trench FS IGBT, Low Loss
GD300CEY120C2S	C2.0	300 A	1200 V	Advanced Trench FS IGBT, Low L
GD300MLX65B3ST	B3.0	300 A	650 V	Trench FS IGBT, Low Loss
GD300TUX65C2S	C2 6 TERMINALI	300 A	650 V	Trench FS IGBT, Low Loss
GD400SGY120C2S	C2.1	400 A	1200 V	Advanced Trench FS IGBT, Low L
GD400FFX65P3S	P3.0	400 A	650 V	Trench FS IGBT, Low Loss
GD400SGU120C2S	C2.1	400 A	1200 V	NPT Ultra Fast IGBT
GD400FFX65P3H	P3.1	400 A	650 V	Trench FS IGBT, Low Loss

	L2.1			
	Package	**Current (A)**	**Voltage (V)**	**Classification**
MD400HFR120C2S	C2.0	400 A	1200 V	SiC MOSFET
GD400HTX120P6H	P6	400 A	1200 V	Trench FS IGBT, Low Loss
GD400HFY120C2S	C2.3	400 A	1200 V	Advanced Trench FS IGBT, Low L
GD400HFU120C2S	C2.3	400 A	1200 V	NPT Ultra Fast IGBT
GD400CLX65C2S	C2.0	400 A	650 V	Trench FS IGBT, Low Loss
GD400HFX65C2S	C2.0	400 A	650 V	Trench FS IGBT, Low Loss
GD400HFX65C8S	C8.0	400 A	650 V	Trench FS IGBT, Low Loss
GD400HFX65C8SN	C8.1	400 A	650 V	Trench FS IGBT, Low Loss
GD400CUY120C2S	C2.0	400 A	1200 V	Advanced Trench FS IGBT, Low L
GD400CLY120C2S	C2.0	400 A	1200 V	Advanced Trench FS IGBT, Low L

	L2.1			
	Package	**Current (A)**	**Voltage (V)**	**Classification**
GD400SGX170C2S	C2.1	400 A	1700 V	Trench FS IGBT, Low Loss
GD400HFX170C2S	C2.0	400 A	1700 V	Trench FS IGBT, Low Loss
GD400CUY65C2S	C2.0	400 A	650 V	Advanced Trench FS IGBT, Low L
GD400MLX65B3ST	B3.0	400 A	650 V	Trench FS IGBT, Low Loss
GD400CFX65C5S	C5	400 A	650 V	Trench FS IGBT, Low Loss
GD400TUX65C2S	C2 6 TERMINALI	400 A	650 V	Trench FS IGBT, Low Loss
GD400CLU120C2S	C2.0	400 A	1200 V	NPT ultra Fast IGBT
GD450HFY120P1S	P1.0	450 A	1200 V	Advanced Trench FS IGBT, Low L
MD29HTC120P6HE	P6	450 A	1200 V	SiC MOSFET
GD450CUY120P1S	P1.0	450 A	1200 V	Advanced Trench FS IGBT, Low L
	P1.0	450 A	1200 V	Advanced Trench FS IGBT, Low L

	L2.1			
	Package	**Current (A)**	**Voltage (V)**	**Classification**
GD450CLY120P1S				
GD450HFY120C2S	C2.0	450 A	1200 V	Advanced Trench FS IGBT, Low L
GD450HFY120C6S	C6.1 Black	450 A	1200 V	Advanced Trench FS IGBT, Low L
GD450HTY120C7S	C7.0	450 A	1200 V	Advanced Trench FS IGBT, Low L
GD450HFX65C6S	C6.1	450 A	650 V	Trench FS IGBT, Low Loss
GD450HFX170C6S	C6.1	450 A	1700 V	Trench FS IGBT, Low Loss
GD450CEY120C2S	C2.0	450 A	1200 V	Advanced Trench FS IGBT, Low L
MD22HTC120P6HE	P6	480 A	1200 V	SiC MOSFET
GD500HFU120C2S	C2.0	500 A	1200 V	NPT Ultra Fast IGBT
GD500HFU120C2S (1)	C2.0	500 A	1200 V	NPT Ultra Fast IGBT
	P1.0	600 A	1200 V	Advanced Trench FS IGBT, Low L

	L2.1			
	Package	**Current (A)**	**Voltage (V)**	**Classification**
GD600HFY120P1S				
GD600SGY120C2S	C2.1	600 A	1200 V	Advanced Trench FS IGBT, Low L
GD600SGU120C2S	C2.1	600 A	1200 V	NPT Ultra Fast IGBT
GD600HTX65P4S	P4.0	600 A	650 V	Trench FS IGBT, Low Loss
GD600HFY120C2S	C2.0	600 A	1200 V	Advanced Trench FS IGBT, Low L
GD600HFY120C6S	C6.1 Black	600 A	1200 V	Advanced Trench FS IGBT, Low L
GD600HFX65C2S	C2.0	600 A	650 V	Trench FS IGBT, Low Loss
GD600CUY120C2S	C2.0	600 A	1200 V	Advanced Trench FS IGBT, Low L
GD600SGX170C2S	C2.1	600 A	1700 V	Trench FS IGBT, Low Loss
GD600HFX65C6S	C6.1	600 A	650 V	Trench FS IGBT, Low Loss
GD600HFY120C6H	C6.12	600 A	1200 V	Advanced Trench FS IGBT, Low L

	Package	Current (A)	Voltage (V)	Classification
GD600HFX170C6S	C6.1	600 A	1700 V	Trench FS IGBT, Low Loss
GD600CEY120C2S	C2.0	600 A	1200 V	Advanced Trench FS IGBT, Low L
GD600CLY120C6S	C2.0	600 A	1200 V	Advanced Trench FS IGBT, Low L
GD600CUY120C6S	C2.0	600 A	1200 V	Advanced Trench FS IGBT, Low L
GD600CUY65C2S	C2.0	600 A	650 V	Advanced Trench FS IGBT, Low L
GD650HFX170P1S	P1.0	650 A	1700 V	Trench FS IGBT, Low Loss
MD13HTC120P6HE	P6	680 A	750 V	SiC MOSFET
GD700HFY120C6H	C6.1	700 A	1200 V	Advanced Trench FS IGBT, Low L
GD800HTX65P4S	P4.0	800 A	650 V	Trench FS IGBT, Low Loss
GD800HFY120C3S	C3.1	800 A	1200 V	Advanced Trench FS IGBT, Low L

	Package	Current (A)	Voltage (V)	Classification
GD800SGX170C3S	C3.2	800 A	1700 V	Trench FS IGBT, Low Loss
GD800HFX170C3S	C3.1	800 A	1700 V	Trench FS IGBT, Low Loss
GD820HTX75P6HB	P6	820 A	750 V	Trench FS IGBT, Low Loss
GD820HTX75P6HL	P6	820 A	750 V	Trench FS IGBT, Low Loss
GD900HFY120P1S	P1.0	900 A	1200 V	Advanced Trench FS IGBT, Low L
GD900CUY120P1S	P1.0	900 A	1200 V	Advanced Trench FS IGBT, Low L
GD900CLY120P1S	P1.0	900 A	1200 V	Advanced Trench FS IGBT, Low L
GD900SGU120C3SN	C3.2	900 A	1200 V	NPT Ultra Fast IGBT
GD900SGU120C3SN(SIC Diode)	C3.2	900 A	1200 V	NPT Ultra Fast IGBT
GD900TLY120P2S	P2.0	900 A	1200 V	Advanced Trench FS IGBT, Low L

	Package	Current (A)	Voltage (V)	Classification
GD950HTX75P6HB	P6	950 A	750 V	Trench FS IGBT, Low Loss
GD950HTX75P6HLB	P6	950 A	750 V	Trench FS IGBT, Low Loss
GD1000HFX170P2S	P2.0	1000 A	1700 V	Trench FS IGBT, Low Loss
GD1200HFY120C3S	C3.1	1200 A	1200 V	Advanced Trench FS IGBT, Low L
GD1200HFX170C3S	C3.0	1200 A	1700 V	Trench FS IGBT, Low Loss
GD1200SGX170C3S	C3.2	1200 A	1700 V	Trench FS IGBT, Low Loss
GD1400HFY120P2S	P2.0	1400 A	1200 V	Advanced Trench FS IGBT, Low L
GD1400HFX170P2S	P2.0	1400 A	1700 V	Trench FS IGBT, Low Loss
GD1600SGX170C3S	C3.2	1600 A	1700 V	Trench FS IGBT, Low Loss
GD2400SGY120C3S	C3.2	2400 A	1200 V	Advanced Trench FS IGBT, Low L

	Package	Current (A)	Voltage (V)	Classification
GD2400SGY120C4S	C4.0	2400 A	1200 V	Advanced Trench FS IGBT, Low L
GD2400SGX170C4S	C4.0	2400 A	1700 V	Trench FS IGBT, Low Loss
GD3600SGY120C4S	C4.0	3600 A	1200 V	Advanced Trench FS IGBT, Low L
GD3600SGX170C4S	C4.0	3600 A	1700 V	Trench FS IGBT, Low Loss

NEWSLETTER

Name

e-mail

Submit

Press Release

05/2020

New series of 1700V IGBT modules

Cadenazzo, Switzerland, 07.05.2020 – StarPower pleased to announce the launch of its new power modules for multiple applications.

The new X-series **features ultra-low conduction losses** as well as **short circuit ruggedness**, strengthening StarPower's offer as a leading, independent manufacturer of power modules. The new range is available over several standard packages and topologies in the medium- and high-power segment to allow its design in applications such as **industrial motor drives**, **renewable energy or induction heating and welding**.

The following standard versions are available:

I_C (A)	Part Number	Packag Outline	Circuit Topology
50A 75A 100A	GD50HFX170C1S GD75HFX170C1S GD100HFX170C1S		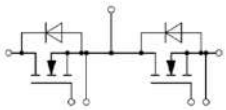
100A 150A 200A 300A 400A	GD100HFX170C2S GD150HFX170C2S GD200HFX170C2S GD300HFX170C2S GD400HFX170C2S		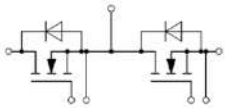
400A 600A	GD400SGX170C2S GD600SGX170C2S		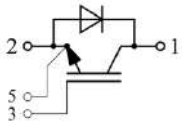
225A 300A 450A 600A	GD225HFX170C6S GD300HFX170C6S GD450HFX170C6S GD600HFX170C6S		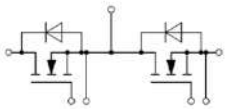
75A 100A 150A	GD75FFX170C6S GD100FFX170C6S GD150FFX170C6S		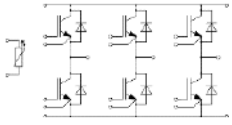

StarPower Europe AG
Ai Ciòss, 11, CH-6593 Cadenazzo
T. +41 091 850 41 41
F. +41 091 840 19 09
www.starpowereurope.com

Press Release

05/2020

I_C (A)	Part Number	Packag Outline	Circuit Topology
50A 75A	GD50PIX170C6S GD75PIX170C6S		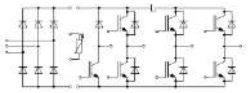
450A 650A 1000A 1400A	GD450HFX170P1S GD650HFX170P1S GD1000HFX170P2S GD1400HFX170P2S		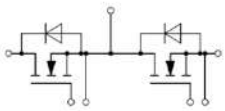

StarPower Semiconductor Ltd. is a leading power module company located in Jiaxing China about 59 miles southeast of Shanghai. Founded in 2005, StarPower designs and manufactures IGBT modules and customized modules for applications in the area of inverters, welding machines, inductive heating, UPS, EV, solar/wind power and others in the power range of 10kW up to 1MW and more.

StarPower Europe AG with head office in Switzerland, Cadenazzo, was established in May 2014 as European branch of StarPower Semiconductor Ltd.

StarPower в Беларуси Заказ г.Минск +375447584780 Viber telegram whatsapp Skype

Contents

Module Nomenclature 04

Low Power Modules

L1/L2/L3/L4 Package Series

650V NPC1 12
650V 3 Phase Bridge 12
650V 3 Phase Bridge with NTC 12
650V PIM 12
1200V 3 Phase Bridge with NTC 13
1200V PIM 13

F1/F2/F3/F4/F5 Package Series

650V NPC1 Boost 14
650V NPC1 14
650V PIM 14
1200V NPC2 15
1200V PIM 15

C5/C6 Package Series

650V 3 Phase Bridge with NTC 16
650V PIM 16
1200V H Bridge 16
1200V 3 Phase Bridge with NTC 17
1200V PIM 17
1700V 3 Phase Bridge with NTC 18
1700V PIM 18

Low Power Module Package Outlines 19

Medium Power Modules

C1/C2/C8 Package Series

650V Boost Chopper 27
650V Buck Chopper 27
650V Half Bridge 27
1200V Single 28
1200V Boost Chopper 28
1200V Buck Chopper 28
1200V Half Bridge 29
1200V H Bridge 30
1700V Single 31
1700V Half Bridge 31

Contents

C6.1/P3/P4 Package Series
650V Half Bridge 32
650V Half NPC1 Up 32
650V Half NPC1 Low 32
650V 3 Phase Bridge with NTC 32
650V Tri-Pack 32
1200V Half Bridge 33
1200V Half NPC1 Up 33
1200V Half NPC1 Low 33
1200V Tri-Pack 33
1700V Half Bridge 34
Medium Power Module Package Outlines 35

High Power Modules
C3/C4/P1/P2 Package Series
1200V Single 38
1200V Half Bridge with NTC 38
1200V Half Bridge 38
1700V Single 38
1700V Half Bridge with NTC 39
1700V Half Bridge 39
High Power Module Package Outlines 40

SiC Mosfet Modules
C2/B3 Package Series
SiC Mosfet 42
SiC Mosfet Module Package Outlines 43

Low Power Modules

Package Type	V_{CES} (V)				I_C (A)								
	600	650	1200	1700	5	10	25	30	40	75	150	200
L1 : PIM		■	■				■	■	■	■	■	■
L2 : 3 phase bridge/PIM		■	■				■	■	■	■	■	■
L3 : 3 phase bridge/PIM/NPC		■	■					■	■	■	■	■
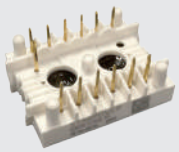 L4 : 3 phase bridge		■	■				■	■				
F1 : PIM/NPC/Boost		■	■						■	■	■	■
F2 : PIM/NPC		■	■						■	■	■	■

Low Power Modules

Package Type	V_{CES} (V)				I_C (A)								
	600	650	1200	1700	5	10	25	30	40	75	150	200
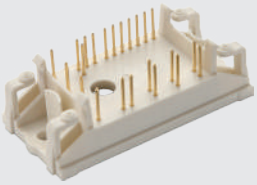 F3 : PIM		■	■				■	■	■	■	■	■
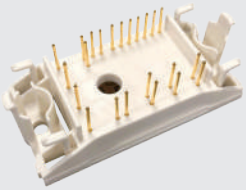 F4 : PIM		■	■				■	■	■	■	■	■
F5 : PIM		■	■						■	■	■	■
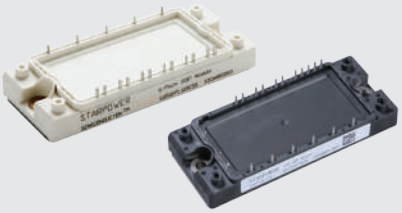 C5 : H bridge/3 phase bridge/PIM		■	■						■	■	■	■
C6 : H bridge/3 phase bridge/PIM		■	■	■							■	■

Medium Power Modules

Package Type	V_{CES} (V)				I_C (A)							
	600	650	1200	1700	50	100	150	200	400	600	800	900
C1：chopper/half bridge	■	■	■		■	■	■	■	■	■	■	■
C2.0：chopper/half bridge	■	■	■				■	■	■	■	■	■
C2.1：single			■	■					■	■	■	■
C8.0：half bridge		■	■				■	■	■	■	■	■
C8.1：half bridge		■	■					■	■	■	■	■

Medium Power Modules

Package Type	V_{CES} (V)				I_C (A)							
	600	650	1200	1700	50	100	150	200	400	600	800	900
C8.2：H bridge			■		▶							
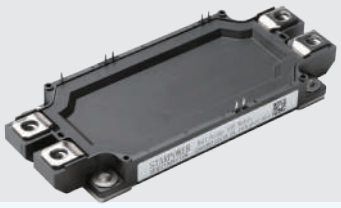 C6.1 black：half bridge/half NPC		■	■					■	■	■		
C6.1 white：half bridge		■	■	■				■	■	■		
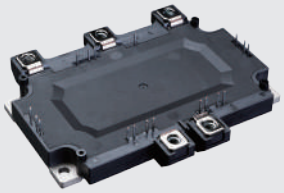 P3：3 phase bridge		■	■						▶			
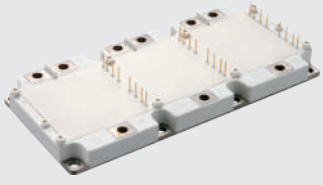 P4：Tri-Pack		■	■							▶		

High Power Modules

Package Type	V_{CES} (V)			I_C (A)							
	1200	1700	3300	400	600	900	1000	1400		2400	3600
C3.0：single	■	■				■	■	■	■	■	
C3.1：half bridge	■	■				■	■				
C3.2：single	■	■				■	■	■	■	■	
C4.0：single	■	■								■	
P1：half bridge	■	■				■					
P2：half bridge	■	■					■				

SiC Mosfet Modules

Package Type	V_{DSS} (V)		I_D (A)				
	1200	1700	50	120	200	400	600
C2 : half bridge							
B3 : half bridge							

IGBT Module Nomenclature

GD	200	HF	X	65	C2	S	(N,F)*

GD =IGBT Modules

Nominal Current
I_C(@T_C=80 ℃) as e.g. 200=200A

Circuit Configuration
SG=Single
CU=Chopper Diode Up Side
CL=Chopper Diode Low Side
HF=Half Bridge
HT=Tri-Pack
HH=H Bridge
HC=Internal Connected H Bridge
ML=3 Level,Diode Clampling,NPC1
MP=Upper Half of NPC1 3 Level
MN=Lower Half of NPC1 3 Level
TL=3 Level,IGBT Active Clampling,NPC2
TU=NPC1 Boost
FF=3 Phase Bridge
FS=3 Phase Open Emitter Output
PI=3 Phase Rectifier+Brake+3 Phase Output
PJ=3 Phase Rectifier+Brake+3 Phase Open Emitter Output
PF=3 Phase Rectifier+H Bridge Output

Die Characteristics
K=NPT Low Loss
U=NPT Ultra Fast IGBT
L=SPT+ Low Loss and Fast IGBT
X=Trench FS IGBT,Low Loss
Y=Advanced Trench FS IGBT,Low Loss
F=Advanced Trench FS Ultra Fast IGBT Without Short-circuit Capacity
Q=Advanced Trench FS Fast IGBT

*N=New Pins Layout
F=PressFIT Pins

Voltage/10 e.g. 65=650V

Package Type
C1=94mmx34mmx30mm,Cu Base
C2=106mmx62mmx30mm,Cu Base
C3=140mmx130mmx38mm,Cu Base
C4=190mmx140mmx38mm,Cu Base
C5=107mmx45mmx17mm,Cu Base
C6=122mmx62mmx17mm,Cu Base
C8=94mmx48mmx29mm,Cu Base
F1=68.4mmx32.5mmx15.65mm,DBC Base
F2=82mmx37.4mmx16.23mm,DBC Base
F3=66mmx32.5mmx21.2mm,DBC Base
F4=68.4mmx32.5mmx21.15mm,DBC Base
F5=82mmx37.4mmx21.25mm,DBC Base
L1=40mmx56mmx20.5mm,DBC Base
L2=34mmx48mmx15.5mm,DBC Base
L3=48mmx57mmx15.5mm,DBC Base
L4=26mmx36mmx15.5mm,DBC Base
P1=172mmx89mmx38mm,Cu Base
P2=250mmx89mmx38mm,Cu Base
P3=113mmx140mmx17mm,Cu Base
P4=100mmx216mmx28.4mm,Cu Base

Screening Level
S=Screened for Industrial Applications
H=Screened for High Reliability Applications

SiC Mosfet Module Nomenclature

MD **300** **HF** **R** **120** **C2** **S**

MD =SiC Mosfet Modules

Nominal Current
I_D(@T_C=80℃) as e.g. 300=300A

Circuit Configuration
HF=Half Bridge

Die Characteristics
R=SiC Mosfet

Voltage/10 e.g. 120=1200V

Package Type
C2=106mmx62mmx30mm,Cu Base
B3=108mmx62mmx17mm,Cu Base

Screening Level
S=Screened for Industrial Applications
H=Screened for High Reliability Applications

Low Power Modules

Type	V_{CES} V	I_C A	$V_{CE(sat)}$ @T_j=25℃ typ. V	(E_{on}+E_{off}) @T_j=125℃ typ. mJ	$R_{th(J-C)}$ K/W	Package Outline/page	Circuit
650V NPC1							
Trench FS IGBT,Low Loss							
GD75MLX65L3S	650	75	1.45	2.32	0.514	L3.1/20	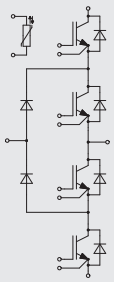
GD100MLX65L3S	650	100	1.45	3.36	0.384	L3.1/20	
GD150MLX65L3S	650	150	1.45	5.48	0.269	L3.1/20	
GD75MLX65L3SF	650	75	1.45	2.32	0.514	L3.3/21	
GD100MLX65L3SF	650	100	1.45	3.36	0.384	L3.3/21	
GD150MLX65L3SF	650	150	1.45	5.48	0.269	L3.3/21	
650V 3 Phase Bridge							
Trench FS IGBT,Low Loss							
GD10FSX65L4S	650	10	1.45	0.44	3.132	L4.0/21	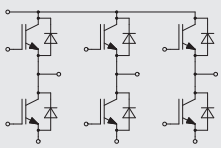
GD15FSX65L4S	650	15	1.45	0.67	2.344	L4.0/21	
GD20FSX65L4S	650	20	1.45	0.99	2.063	L4.0/21	
GD30FSX65L4S	650	30	1.45	1.04	1.289	L4.0/21	
650V 3 Phase Bridge with NTC							
Trench FS IGBT,Low Loss							
GD20FSX65L2S	650	20	1.45	0.99	1.955	L2.1/19	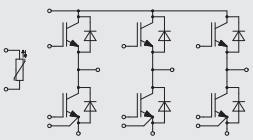
GD30FSX65L2S	650	30	1.45	1.04	1.222	L2.1/19	
GD50FSX65L2S	650	50	1.45	1.74	0.745	L2.1/19	
GD20FSX65L2SF	650	20	1.45	0.99	1.955	L2.6/20	
GD30FSX65L2SF	650	30	1.45	1.04	1.222	L2.6/20	
GD50FSX65L2SF	650	50	1.45	1.74	0.745	L2.6/20	
650V PIM							
Trench FS IGBT,Low Loss							
GD10PJX65L2S	650	10	1.45	0.44	2.968	L2.2/19	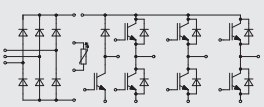
GD15PJX65L2S	650	15	1.45	0.67	2.221	L2.2/19	
GD20PJX65L2S	650	20	1.45	0.99	1.955	L2.2/19	
GD30PJX65L2S	650	30	1.45	1.04	1.222	L2.2/19	
GD50PJX65L3S	650	50	1.45	1.74	0.745	L3.0/20	
GD10PJX65L2SF	650	10	1.45	0.44	2.968	L2.5/19	
GD15PJX65L2SF	650	15	1.45	0.67	2.221	L2.5/19	
GD20PJX65L2SF	650	20	1.45	0.99	1.955	L2.5/19	
GD30PJX65L2SF	650	30	1.45	1.04	1.222	L2.5/19	
GD50PJX65L3SF	650	50	1.45	1.74	0.745	L3.5/21	

Low Power Modules

Type	V_{CES} V	I_C A	$V_{CE(sat)}$ @T_j=25℃ typ. V	(E_{on}+E_{off}) @T_j=125℃ typ. mJ	$R_{th(J-C)}$ K/W	Package Outline/page	Circuit
1200V 3 Phase Bridge with NTC							
Advanced Trench FS IGBT,Low Loss							
GD25FSY120L2S	1200	25	1.70	4.78	0.710	L2.1/19	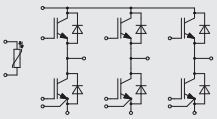
GD35FSY120L2S	1200	35	1.70	6.09	0.552	L2.1/19	
GD50FSY120L3S	1200	50	1.70	12.67	0.449	L3.2/20	
GD75FSY120L3S	1200	75	1.70	14.40	0.292	L3.2/20	
1200V PIM							
Advanced Trench FS IGBT,Low Loss							
GD10PJY120L2S	1200	10	1.70	2.27	1.200	L2.2/19	
GD15PJY120L2S	1200	15	1.70	3.11	1.020	L2.2/19	
GD25PJY120L3S	1200	25	1.70	4.78	0.710	L3.0/20	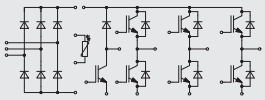
GD35PJY120L3S	1200	35	1.70	6.09	0.552	L3.0/20	
NPT Low Loss							
GD10PJK120L1S	1200	10	2.20	1.91	1.600	L1.2/19	
GD15PJK120L1S	1200	15	2.20	2.95	1.180	L1.2/19	
GD10PJK120L2S	1200	10	2.20	1.91	1.200	L2.2/19	

Low Power Modules

Type	V_{CES} V	I_C A	$V_{CE(sat)}$ @T_j=25℃ typ. V	(E_{on}+E_{off}) @T_j=125℃ typ. mJ	$R_{th(J-C)}$ K/W	Package Outline/page	Circuit
650V NPC1 Boost							
Trench FS IGBT,Low Loss							
GD30TUX65F1S	650	30	1.45	1.04	1.400	F1.3/22	
GD50TUX65F1S	650	50	1.45	1.74	0.854	F1.3/22	
GD75TUX65F1S	650	75	1.45	2.32	0.589	F1.3/22	
650V NPC1							
Trench FS IGBT,Low Loss							
GD30MLX65F1S	650	30	1.45	1.04	1.400	F1.2/22	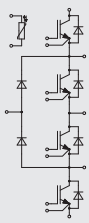
GD50MLX65F1S	650	50	1.45	1.74	0.854	F1.2/22	
GD75MLX65F1S	650	75	1.45	2.32	0.589	F1.2/22	
GD30MLX65F1SF	650	30	1.45	1.04	1.400	F1.4/22	
GD75MLX65F1SF	650	75	1.45	2.32	0.589	F1.4/22	
650V PIM							
Trench FS IGBT,Low Loss							
GD10PJX65F1S	650	10	1.45	0.44	3.402	F1.1/21	
GD15PJX65F1S	650	15	1.45	0.67	2.546	F1.1/21	
GD20PJX65F1S	650	20	1.45	0.99	2.241	F1.1/21	
GD30PJX65F1S	650	30	1.45	1.04	1.400	F1.1/21	
GD30PJX65F2S	650	30	1.45	1.04	1.400	F2.0/22	
GD50PJX65F2S	650	50	1.45	1.74	0.854	F2.0/22	
GD75PJX65F2S	650	75	1.45	2.32	0.589	F2.0/22	
GD10PJX65F3S	650	10	1.45	0.44	3.402	F3.0/23	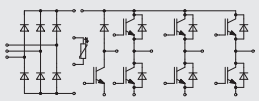
GD15PJX65F3S	650	15	1.45	0.67	2.546	F3.0/23	
GD20PJX65F3S	650	20	1.45	0.99	2.241	F3.0/23	
GD30PJX65F3S	650	30	1.45	1.04	1.400	F3.0/23	
GD10PJX65F4S	650	10	1.45	0.44	3.402	F4.1/23	
GD15PJX65F4S	650	15	1.45	0.67	2.546	F4.1/23	
GD20PJX65F4S	650	20	1.45	0.99	2.241	F4.1/23	
GD30PJX65F4S	650	30	1.45	1.04	1.400	F4.1/23	
GD30PJX65F5S	650	30	1.45	1.04	1.400	F5.1/23	
GD50PJX65F5S	650	50	1.45	1.74	0.854	F5.1/23	
GD75PJX65F5S	650	75	1.45	2.32	0.589	F5.1/23	

Low Power Modules

Type	V_{CES} V	I_C A	$V_{CE(sat)}$ @T_j=25℃ typ. V	(E_{on}+E_{off}) @T_j=125℃ typ. mJ	$R_{th(J-C)}$ K/W	Package Outline/page	Circuit
1200V NPC2							
Advanced Trench FS Fast IGBT							
GD40TLQ120F1S	1200	40	2.00	1.57	0.572	F1.2/22	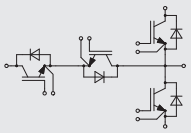
GD80TLQ120F1S	1200	80	2.00	3.14	0.286	F1.2/22	
GD40TLQ120F1SF	1200	40	2.00	1.57	0.572	F1.4/22	
GD80TLQ120F1SF	1200	80	2.00	3.14	0.286	F1.4/22	
1200V PIM							
Advanced Trench FS IGBT,Low Loss							
GD10PJY120F1S	1200	10	1.70	2.27	1.340	F1.1/21	
GD15PJY120F1S	1200	15	1.70	3.11	1.165	F1.1/21	
GD15PJY120F2S	1200	15	1.70	3.11	1.165	F2.0/22	
GD25PJY120F2S	1200	25	1.70	4.78	0.794	F2.0/22	
GD35PJY120F2S	1200	35	1.70	6.09	0.633	F2.0/22	
GD50PJY120F2S	1200	50	1.70	12.67	0.515	F2.0/22	
GD10PJY120F3S	1200	10	1.70	2.27	1.340	F3.0/23	
GD15PJY120F3S	1200	15	1.70	3.11	1.165	F3.0/23	
GD10PJY120F4S	1200	10	1.70	2.27	1.340	F4.1/23	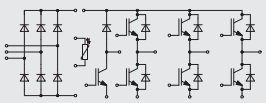
GD15PJY120F4S	1200	15	1.70	3.11	1.165	F4.1/23	
GD15PJY120F5S	1200	15	1.70	3.11	1.165	F5.1/23	
GD25PJY120F5S	1200	25	1.70	4.78	0.794	F5.1/23	
GD35PJY120F5S	1200	35	1.70	6.09	0.633	F5.1/23	
NPT Low Loss							
GD10PJK120F1S	1200	10	2.20	1.91	1.340	F1.1/21	
GD15PJK120F2S	1200	15	2.20	2.95	0.984	F2.0/22	
GD10PJK120F3S	1200	10	2.20	1.91	1.340	F3.0/23	
GD10PJK120F4S	1200	10	2.20	1.91	1.340	F4.1/23	
GD15PJK120F5S	1200	15	2.20	2.95	0.984	F5.1/23	

Low Power Modules

Type	V_{CES} V	I_C A	$V_{CE(sat)}$ @T_j=25℃ typ. V	(E_{on}+E_{off}) @T_j=125℃ typ. mJ	$R_{th(J-C)}$ K/W	Package Outline/page	Circuit
650V 3 Phase Bridge with NTC							
Trench FS IGBT,Low Loss							
GD50FFX65C5S	650	50	1.45	1.7	0.793	C5.2/24	
GD75FFX65C5S	650	75	1.45	2.3	0.561	C5.2/24	
GD100FFX65C5S	650	100	1.45	3.4	0.452	C5.2/24	
GD50FFX65C5SF	650	50	1.45	1.7	0.793	C5.12/24	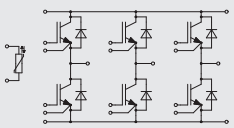
GD75FFX65C5SF	650	75	1.45	2.3	0.561	C5.12/24	
GD100FFX65C5SF	650	100	1.45	3.4	0.452	C5.12/24	
GD100FFX65C6S	650	100	1.45	3.4	0.452	C6.2/25	
GD150FFX65C6S	650	150	1.45	5.5	0.339	C6.2/25	
GD200FFX65C6S	650	200	1.45	6.9	0.247	C6.2/25	
GD100FFX65C6SF	650	100	1.45	3.4	0.452	C6.8/26	
GD150FFX65C6SF	650	150	1.45	5.5	0.339	C6.8/26	
GD200FFX65C6SF	650	200	1.45	6.9	0.247	C6.8/26	
650V PIM							
Trench FS IGBT,Low Loss							
GD30PIX65C5S	650	30	1.45	1.0	1.025	C5.0/23	
GD50PIX65C5S	650	50	1.45	1.7	0.793	C5.0/23	
GD50PIX65C6S	650	50	1.45	1.7	0.793	C6.0/25	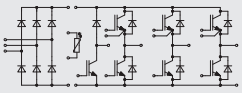
GD75PIX65C6S	650	75	1.45	2.3	0.561	C6.0/25	
GD100PIX65C6S	650	100	1.45	3.4	0.452	C6.0/25	
1200V H Bridge							
NPT Ultra Fast IGBT							
GD50HHU120C5S	1200	50	3.10	7.9	0.316	C5.4/24	
GD75HHU120C5S	1200	75	3.10	9.3	0.225	C5.4/24	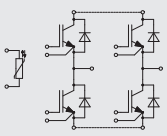
GD100HHU120C6S	1200	100	3.10	12.7	0.196	C6.4/26	
GD150HHU120C6S	1200	150	3.10	23.7	0.106	C6.4/26	

Low Power Modules

Type	V_{CES} V	I_C A	$V_{CE(sat)}$ @T_j=25℃ typ. V	(E_{on}+E_{off}) @T_j=125℃ typ. mJ	$R_{th(J-C)}$ K/W	Package Outline/page	Circuit
1200V 3 Phase Bridge with NTC							
Advanced Trench FS IGBT,Low Loss							
GD25FFY120C5S	1200	25	1.70	4.8	0.808	C5.2/24	
GD35FFY120C5S	1200	35	1.70	6.1	0.629	C5.2/24	
GD50FFY120C5S	1200	50	1.70	12.7	0.512	C5.2/24	
GD75FFY120C5S	1200	75	1.70	14.4	0.394	C5.2/24	
GD100FFY120C5S	1200	100	1.70	18.5	0.293	C5.2/24	
GD75FFY120C6S	1200	75	1.70	14.4	0.394	C6.2/25	
GD100FFY120C6S	1200	100	1.70	18.5	0.293	C6.2/25	
GD150FFY120C6S	1200	150	1.70	26.1	0.170	C6.2/25	
GD200FFY120C6S	1200	200	1.70	36.8	0.149	C6.2/25	
NPT Low Loss							
GD25FFK120C5SP	1200	25	2.20	5.5	0.576	C5.6/25	
GD35FFK120C5SP	1200	35	2.20	7.9	0.707	C5.6/25	
GD50FFK120C5SP	1200	50	2.20	12.5	0.332	C5.6/25	
GD75FFK120C6S	1200	75	2.20	12.4	0.219	C6.2/25	
GD100FFK120C6S	1200	100	2.20	18.3	0.219	C6.2/25	
1200V PIM							
Advanced Trench FS IGBT,Low Loss							
GD10PIY120C5S	1200	10	1.70	2.3	1.279	C5.0/23	
GD15PIY120C5S	1200	15	1.70	3.1	0.904	C5.0/23	
GD25PIY120C5S	1200	25	1.70	4.8	0.728	C5.0/23	
GD40PIY120C5S	1200	40	1.70	5.8	0.535	C5.0/23	
GD25PIY120C5SN	1200	25	1.70	4.8	0.728	C5.3/24	
GD35PIY120C5SN	1200	35	1.70	6.1	0.569	C5.3/24	
GD50PIY120C5SN	1200	50	1.70	12.7	0.512	C5.3/24	
GD40PIY120C6S	1200	40	1.70	5.8	0.535	C6.0/25	
GD50PIY120C6S	1200	50	1.70	12.7	0.512	C6.0/25	
GD75PIY120C6S	1200	75	1.70	14.4	0.394	C6.0/25	
GD50PIY120C6SN	1200	50	1.70	12.7	0.512	C6.3/25	
GD75PIY120C6SN	1200	75	1.70	14.4	0.394	C6.3/25	
GD100PIY120C6SN	1200	100	1.70	18.5	0.293	C6.3/25	
GD150PIY120C6SN	1200	150	1.70	26.1	0.170	C6.3/25	

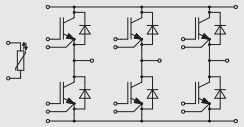

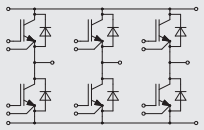

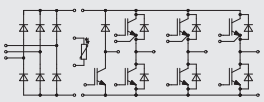

Low Power Modules

Type	V_{CES} V	I_C A	$V_{CE(sat)}$ @T_j=25℃ typ. V	(E_{on}+E_{off}) @T_j=125℃ typ. mJ	$R_{th(J-C)}$ K/W	Package Outline/page	Circuit
1700V 3 Phase Bridge with NTC							
SPT+ Low Loss and Fast IGBT							
GD75FFL170C6S	1700	75	2.40	47.6	0.273	C6.2/25	
GD100FFL170C6S	1700	100	2.40	56.8	0.210	C6.2/25	
GD150FFL170C6S	1700	150	2.40	101.0	0.169	C6.2/25	
GD100FFL170C6SF	1700	100	2.40	56.8	0.210	C6.8/26	
GD150FFL170C6SF	1700	150	2.40	101.0	0.169	C6.8/26	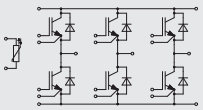
Trench FS IGBT,Low Loss							
GD75FFX170C6S	1700	75	1.85	51.0	0.319	C6.2/25	
GD100FFX170C6S	1700	100	1.85	62.4	0.245	C6.2/25	
GD150FFX170C6S	1700	150	1.85	113.7	0.167	C6.2/25	
GD100FFX170C6SF	1700	100	1.85	62.4	0.245	C6.8/26	
GD150FFX170C6SF	1700	150	1.85	113.7	0.167	C6.8/26	
1700V PIM							
SPT+ Low Loss and Fast IGBT							
GD50PIL170C6S	1700	50	2.40	33.0	0.380	C6.0/25	
GD75PIL170C6S	1700	75	2.40	47.6	0.273	C6.0/25	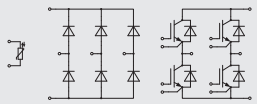
Trench FS IGBT,Low Loss							
GD75PFX170C6S	1700	75	1.85	51.0	0.319	C6.7/26	
GD100PFX170C6S	1700	100	1.85	62.4	0.245	C6.7/26	
GD150PFX170C6S	1700	150	1.85	113.7	0.167	C6.7/26	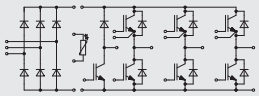
GD50PIX170C6S	1700	50	1.85	31.3	0.455	C6.0/25	
GD75PIX170C6S	1700	75	1.85	51.0	0.319	C6.0/25	

Low Power Module Package Outlines

Case L1.2

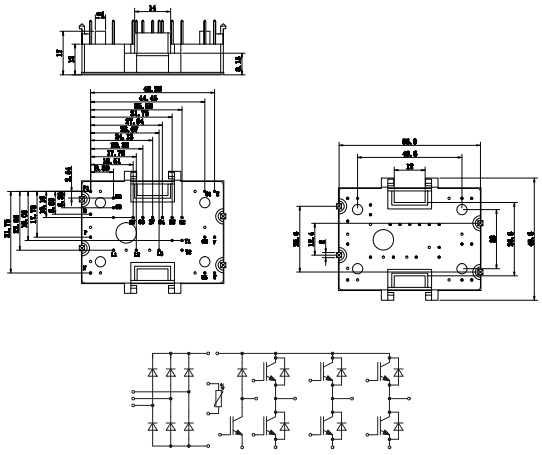

Case L2.1

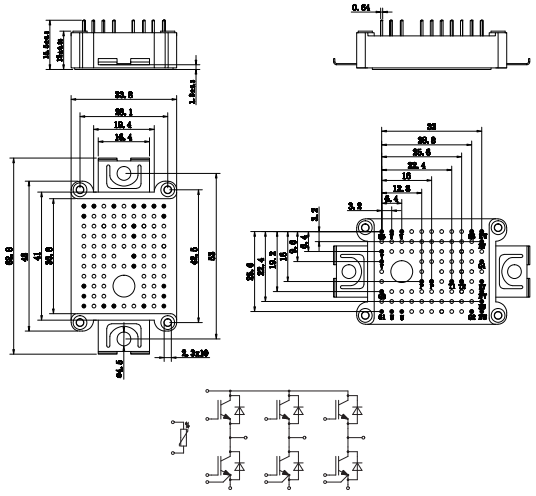

Case L2.2

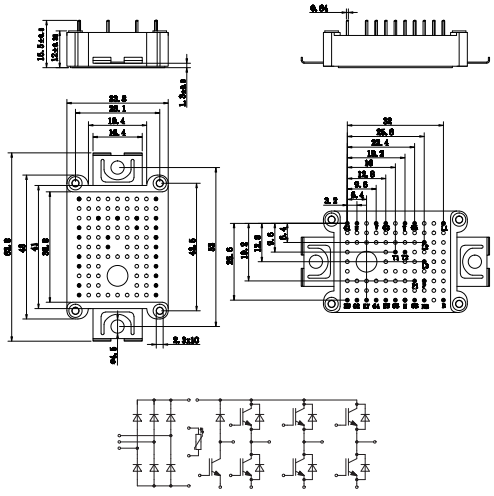

Case L2.5

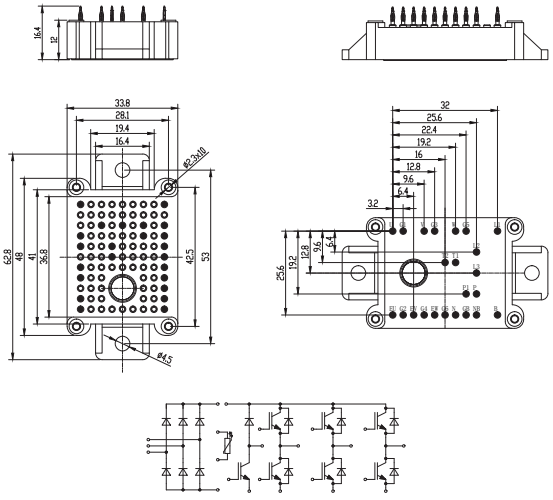

Low Power Module Package Outlines

Case L2.6

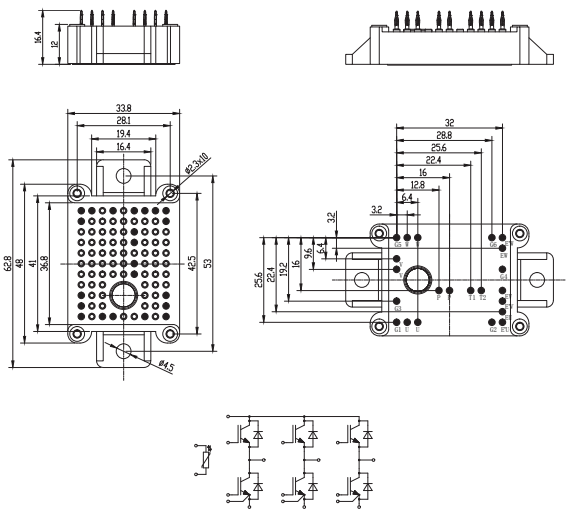

Case L3.0

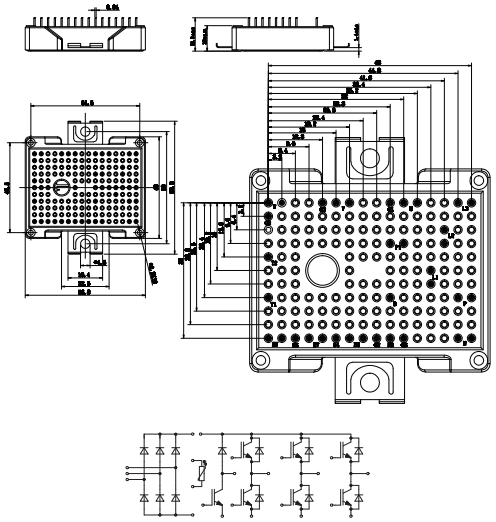

Case L3.1

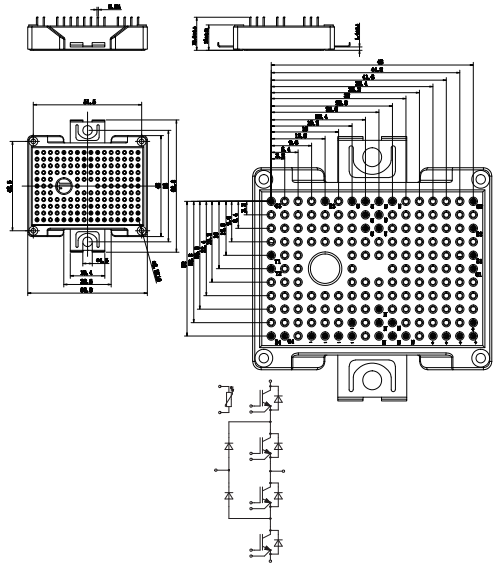

Case L3.2

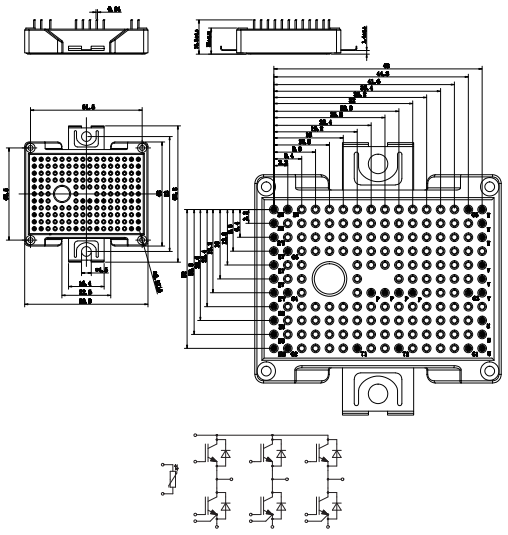

Low Power Module Package Outlines

Case L3.3

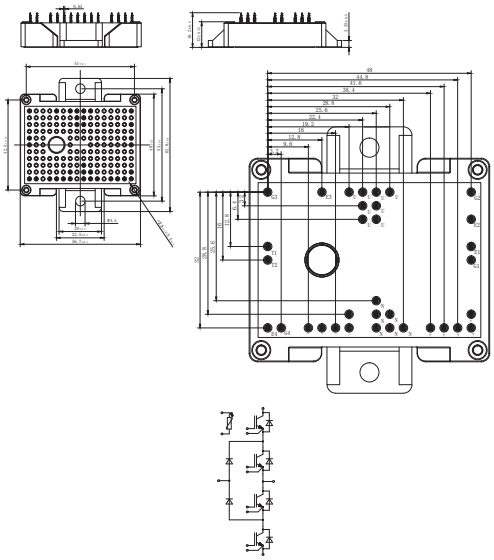

Case L3.5

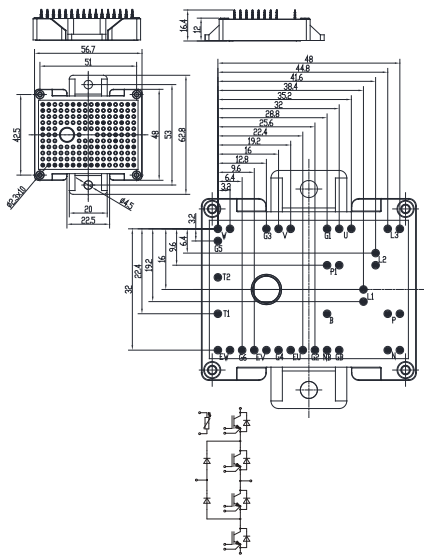

Case L4.0

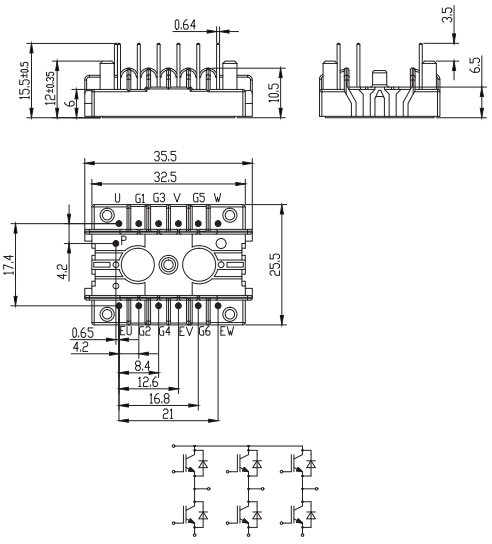

Case F1.1

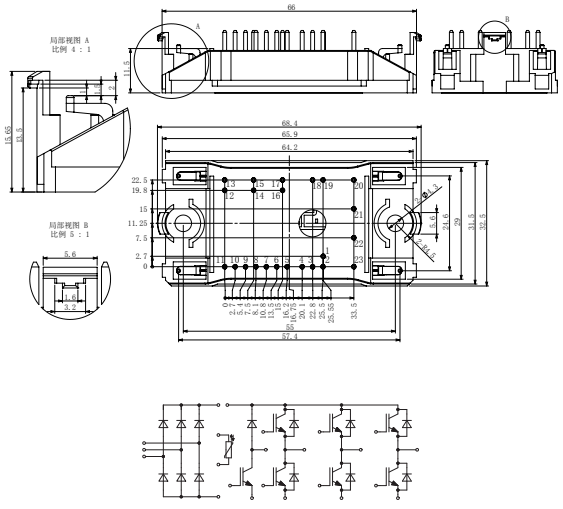

Low Power Module Package Outlines

Case F1.2

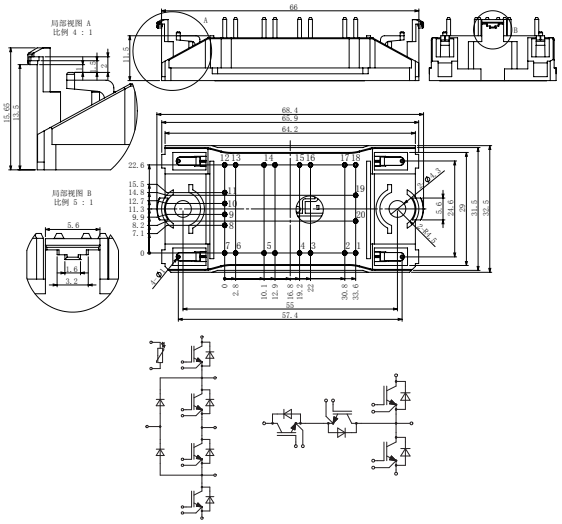

Case F1.3

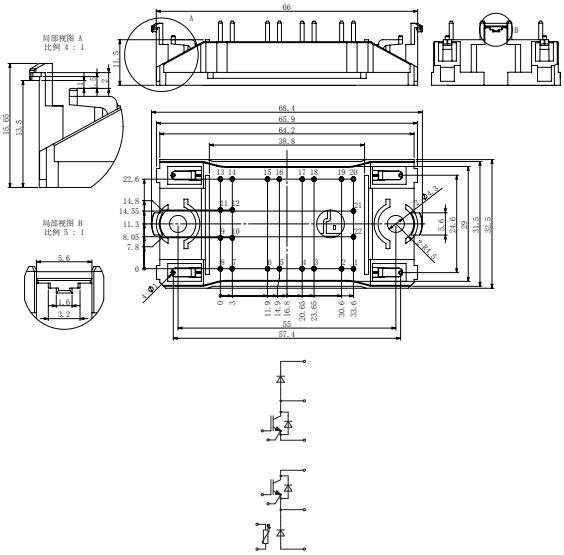

Case F1.4

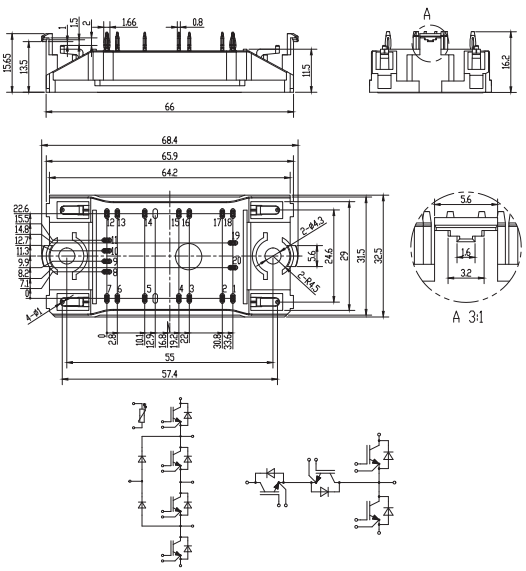

Case F2.0

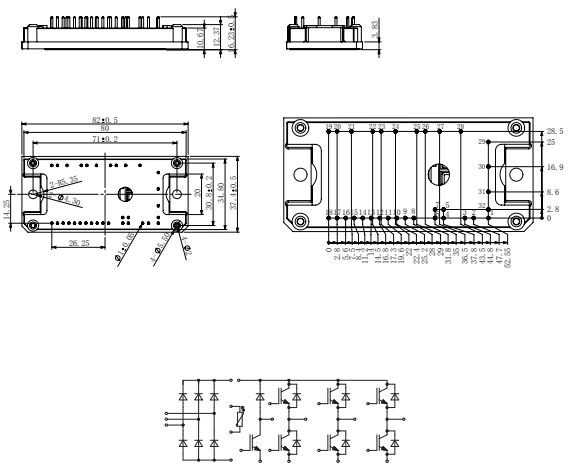

Low Power Module Package Outlines

Case F3.0

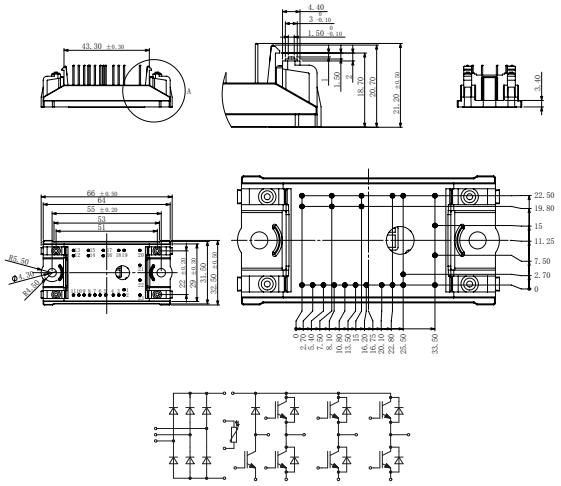

Case F4.1

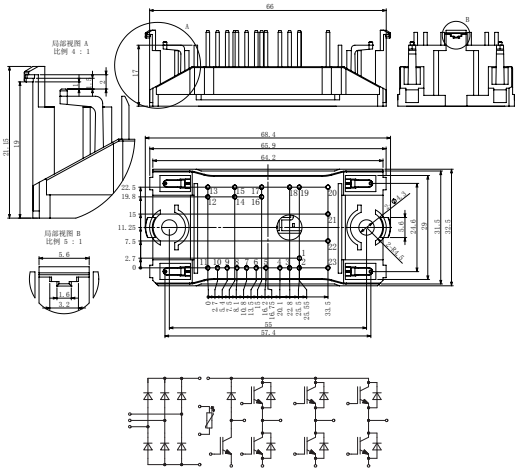

Case F5.1

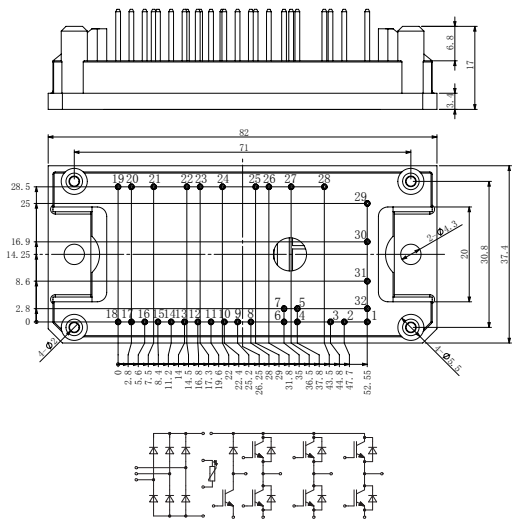

Case C5.0

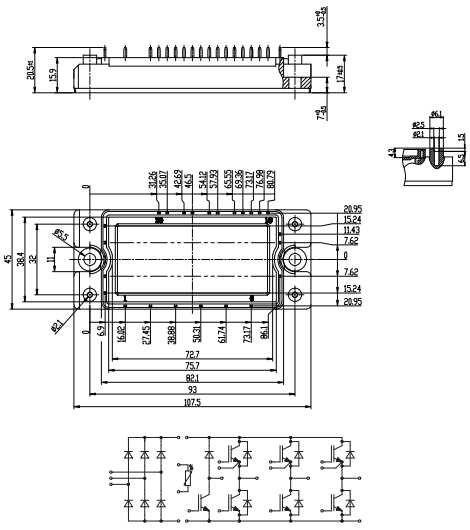

Low Power Module Package Outlines

Case C5.12

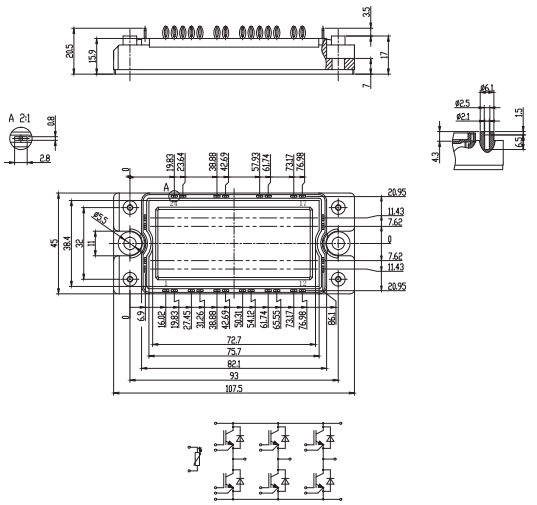

Case C5.2

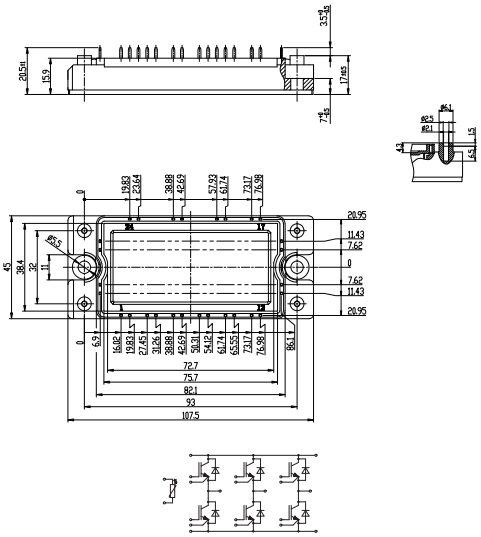

Case C5.3

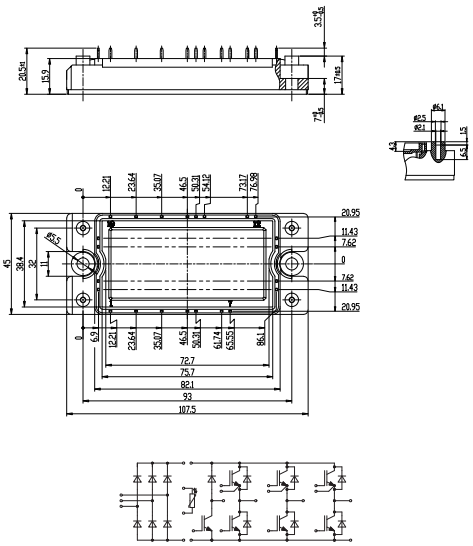

Case C5.4

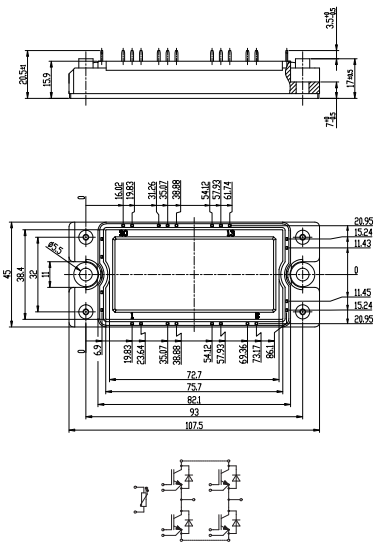

Low Power Module Package Outlines

Case C5.6

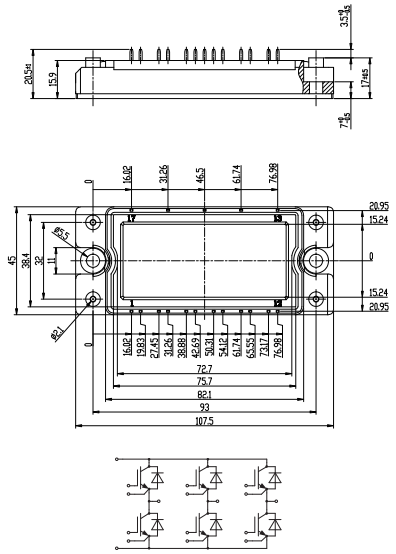

Case C6.0

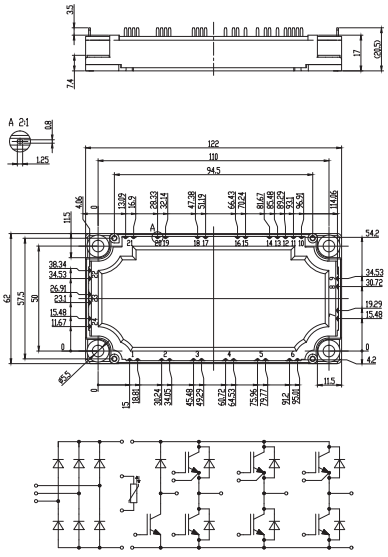

Case C6.2

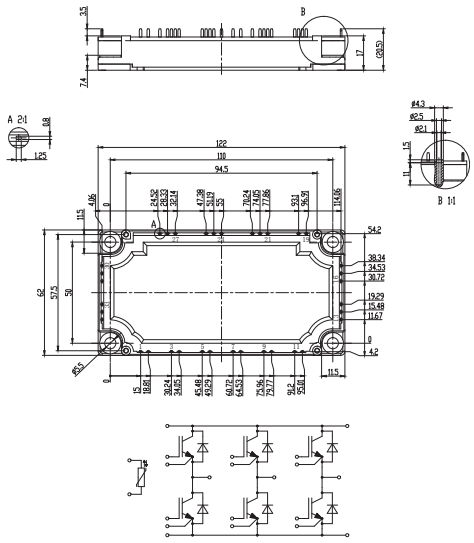

Case C6.3

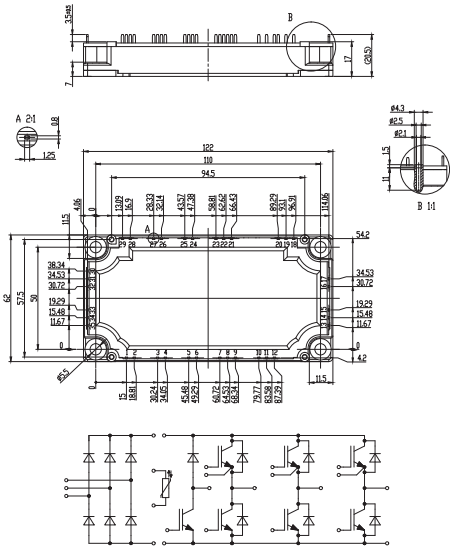

Low Power Module Package Outlines

Case C6.4

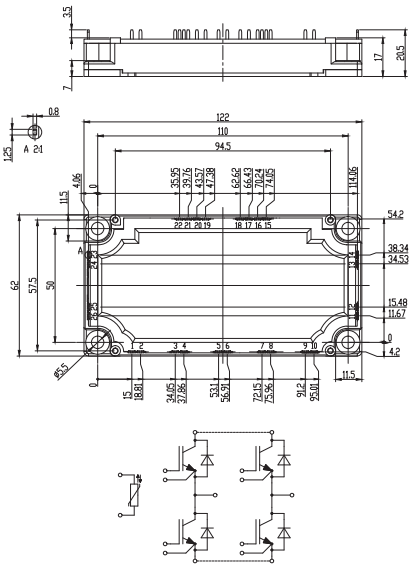

Case C6.7

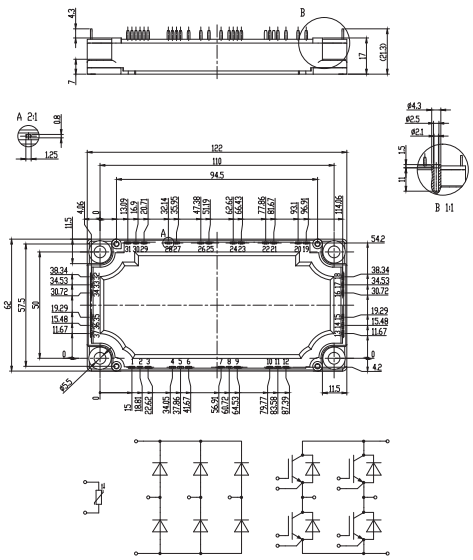

Case C6.8

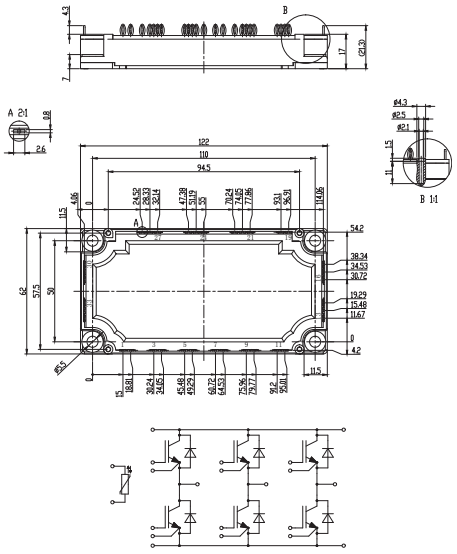

Medium Power Modules

Type	V_{CES} V	I_C A	$V_{CE(sat)}$ @T_j=25℃ typ. V	(E_{on}+E_{off}) @T_j=125℃ typ. mJ	$R_{th(J-C)}$ K/W	Package Outline/page	Circuit
650V Boost Chopper							
Trench FS IGBT,Low Loss							
GD200CUX65C2S	650	200	1.45	6.9	0.245	C2.0/35	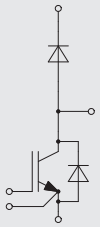
GD300CUX65C2S	650	300	1.45	12.7	0.157	C2.0/35	
GD400CUX65C2S	650	400	1.45	16.2	0.121	C2.0/35	
GD600CUX65C2S	650	600	1.45	29.9	0.080	C2.0/35	
650V Buck Chopper							
Trench FS IGBT,Low Loss							
GD200CLX65C2S	650	200	1.45	6.9	0.245	C2.0/35	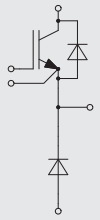
GD300CLX65C2S	650	300	1.45	12.7	0.157	C2.0/35	
GD400CLX65C2S	650	400	1.45	16.2	0.121	C2.0/35	
GD600CLX65C2S	650	600	1.45	29.9	0.080	C2.0/35	
650V Half Bridge							
Trench FS IGBT,Low Loss							
GD50HFX65C1S	650	50	1.45	1.7	0.470	C1.0/35	
GD75HFX65C1S	650	75	1.45	2.3	0.707	C1.0/35	
GD100HFX65C1S	650	100	1.45	3.4	0.452	C1.0/35	
GD150HFX65C1S	650	150	1.45	5.5	0.339	C1.0/35	
GD200HFX65C1S	650	200	1.45	6.9	0.245	C1.0/35	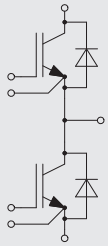
GD200HFX65C2S	650	200	1.45	6.9	0.245	C2.0/35	
GD300HFX65C2S	650	300	1.45	12.7	0.157	C2.0/35	
GD400HFX65C2S	650	400	1.45	16.2	0.121	C2.0/35	
GD600HFX65C2S	650	600	1.45	29.9	0.080	C2.0/35	
GD200HFX65C8S	650	200	1.45	6.9	0.245	C8.0/36	
GD300HFX65C8S	650	300	1.45	12.7	0.157	C8.0/36	
GD400HFX65C8S	650	400	1.45	16.2	0.121	C8.0/36	
GD200HFX65C8SN	650	200	1.45	6.9	0.245	C8.1/36	
GD300HFX65C8SN	650	300	1.45	12.7	0.157	C8.1/36	
GD400HFX65C8SN	650	400	1.45	16.2	0.121	C8.1/36	

Medium Power Modules

Type	V_{CES} V	I_C A	$V_{CE(sat)}$ @T_j=25℃ typ. V	(E_{on}+E_{off}) @T_j=125℃ typ. mJ	$R_{th(J-C)}$ K/W	Package Outline/page	Circuit
1200V Single							
Advanced Trench FS IGBT,Low Loss							
GD300SGY120C2S	1200	300	1.70	57.1	0.093	C2.1/35	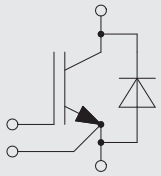
GD400SGY120C2S	1200	400	1.70	86.8	0.072	C2.1/35	
GD600SGY120C2S	1200	600	1.70	103.8	0.040	C2.1/35	
NPT Ultra Fast IGBT							
GD400SGU120C2S	1200	400	3.10	41.6	0.047	C2.1/35	
GD600SGU120C2S	1200	600	3.10	130.8	0.031	C2.1/35	
1200V Boost Chopper							
Advanced Trench FS IGBT,Low Loss							
GD100CUY120C1S	1200	100	1.70	12.7	0.512	C1.0/35	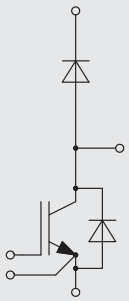
GD150CUY120C1S	1200	150	1.70	14.4	0.394	C1.0/35	
GD100CUY120C2S	1200	100	1.70	18.5	0.278	C2.0/35	
GD150CUY120C2S	1200	150	1.70	26.1	0.203	C2.0/35	
GD200CUY120C2S	1200	200	1.70	36.8	0.143	C2.0/35	
GD300CUY120C2S	1200	300	1.70	57.1	0.093	C2.0/35	
GD400CUY120C2S	1200	400	1.70	86.8	0.072	C2.0/35	
GD450CUY120C2S	1200	450	1.70	89.8	0.063	C2.0/35	
GD600CUY120C2S	1200	600	1.70	103.8	0.040	C2.0/35	
1200V Buck Chopper							
Advanced Trench FS IGBT,Low Loss							
GD100CLY120C1S	1200	100	1.70	12.7	0.512	C1.0/35	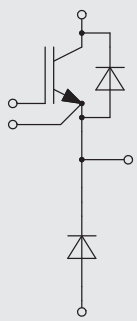
GD150CLY120C1S	1200	150	1.70	14.4	0.394	C1.0/35	
GD100CLY120C2S	1200	100	1.70	18.5	0.278	C2.0/35	
GD150CLY120C2S	1200	150	1.70	26.1	0.203	C2.0/35	
GD200CLY120C2S	1200	200	1.70	36.8	0.143	C2.0/35	
GD300CLY120C2S	1200	300	1.70	57.1	0.093	C2.0/35	
GD400CLY120C2S	1200	400	1.70	86.8	0.072	C2.0/35	
GD450CLY120C2S	1200	450	1.70	89.8	0.063	C2.0/35	
GD600CLY120C2S	1200	600	1.70	103.8	0.040	C2.0/35	

Medium Power Modules

Type	V_{CES} V	I_C A	$V_{CE(sat)}$ @T_j=25℃ typ. V	(E_{on}+E_{off}) @T_j=125℃ typ. mJ	$R_{th(J-C)}$ K/W	Package Outline/page	Circuit
1200V Half Bridge							
Advanced Trench FS IGBT,Low Loss							
GD50HFY120C1S	1200	50	1.70	12.7	0.512	C1.0/35	
GD75HFY120C1S	1200	75	1.70	14.4	0.394	C1.0/35	
GD100HFY120C1S	1200	100	1.70	18.5	0.278	C1.0/35	
GD150HFY120C1S	1200	150	1.70	26.1	0.203	C1.0/35	
GD100HFY120C2S	1200	100	1.70	18.5	0.278	C2.0/35	
GD150HFY120C2S	1200	150	1.70	26.1	0.203	C2.0/35	
GD200HFY120C2S	1200	200	1.70	36.8	0.143	C2.0/35	
GD300HFY120C2S	1200	300	1.70	57.1	0.093	C2.0/35	
GD400HFY120C2S	1200	400	1.70	86.8	0.072	C2.0/35	
GD450HFY120C2S	1200	450	1.70	89.8	0.063	C2.0/35	
GD600HFY120C2S	1200	600	1.70	103.8	0.040	C2.0/35	
GD100HFY120C8S	1200	100	1.70	18.5	0.278	C8.0/36	
GD150HFY120C8S	1200	150	1.70	26.1	0.203	C8.0/36	
GD200HFY120C8S	1200	200	1.70	36.8	0.143	C8.0/36	
GD150HFY120C8SN	1200	150	1.70	26.1	0.203	C8.1/36	
GD200HFY120C8SN	1200	200	1.70	36.8	0.143	C8.1/36	
Advanced Trench FS Ultra Fast IGBT Without Short-circuit Capacity							
GD50HFF120C1S	1200	50	1.70	9.1	0.512	C1.0/35	
GD75HFF120C1S	1200	75	1.70	9.8	0.394	C1.0/35	
GD100HFF120C1S	1200	100	1.70	16.3	0.278	C1.0/35	
GD150HFF120C1S	1200	150	1.70	19.6	0.180	C1.0/35	
GD100HFF120C2S	1200	100	1.70	16.3	0.278	C2.0/35	
GD150HFF120C2S	1200	150	1.70	19.6	0.180	C2.0/35	
GD200HFF120C2S	1200	200	1.70	32.7	0.142	C2.0/35	
GD300HFF120C2S	1200	300	1.70	49.0	0.094	C2.0/35	
GD400HFF120C2S	1200	400	1.70	65.2	0.066	C2.0/35	

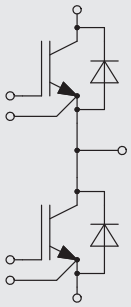

Medium Power Modules

Type	V_{CES} V	I_C A	$V_{CE(sat)}$ @T_j=25℃ typ. V	(E_{on}+E_{off}) @T_j=125℃ typ. mJ	$R_{th(J-C)}$ K/W	Package Outline/page	Circuit
NPT Low Loss							
GD50HFK120C1S	1200	50	2.20	12.5	0.315	C1.0/35	
GD75HFK120C1S	1200	75	2.20	12.4	0.229	C1.0/35	
GD100HFK120C1S	1200	100	2.20	18.3	0.180	C1.0/35	
GD100HFK120C2S	1200	100	2.20	18.3	0.165	C2.0/35	
GD150HFK120C2S	1200	150	2.20	28.2	0.105	C2.0/35	
GD200HFK120C2S	1200	200	2.20	41.1	0.092	C2.0/35	
GD300HFK120C2S	1200	300	2.20	41.1	0.060	C2.0/35	
NPT Ultra Fast IGBT							
GD40HFU120C1S	1200	40	3.10	6.3	0.447	C1.0/35	
GD50HFU120C1S	1200	50	3.10	7.9	0.302	C1.0/35	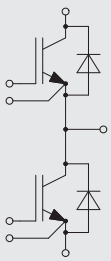
GD75HFU120C1S	1200	75	3.10	12.7	0.221	C1.0/35	
GD100HFU120C1S	1200	100	3.10	12.5	0.190	C1.0/35	
GD100HFU120C2S	1200	100	3.10	15.7	0.180	C2.0/35	
GD150HFU120C2S	1200	150	3.10	21.5	0.108	C2.0/35	
GD200HFU120C2S	1200	200	3.10	24.9	0.095	C2.0/35	
GD300HFU120C2S	1200	300	3.10	32.7	0.063	C2.0/35	
GD400HFU120C2S	1200	400	3.10	41.6	0.047	C2.0/35	
GD100HFU120C8S	1200	100	3.10	10.3	0.158	C8.0/36	
GD150HFU120C8S	1200	150	3.10	16.0	0.107	C8.0/36	
GD200HFU120C8S	1200	200	3.10	24.9	0.095	C8.0/36	
GD150HFU120C8SN	1200	150	3.10	16.0	0.107	C8.1/36	
GD200HFU120C8SN	1200	200	3.10	24.9	0.095	C8.1/36	
1200V H Bridge							
NPT Ultra Fast IGBT							
GD40HCU120C8S	1200	40	3.10	6.3	0.447	C8.2/36	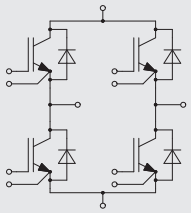
GD50HCU120C8S	1200	50	3.10	7.9	0.312	C8.2/36	
GD75HCU120C8S	1200	75	3.10	11.9	0.210	C8.2/36	

Medium Power Modules

Type	V_{CES} V	I_C A	$V_{CE(sat)}$ @T_j=25℃ typ. V	(E_{on}+E_{off}) @T_j=125℃ typ. mJ	$R_{th(J-C)}$ K/W	Package Outline/page	Circuit
1700V Single							
SPT+ Low Loss and Fast IGBT							
GD400SGL170C2S	1700	400	2.40	167.7	0.054	C2.1/35	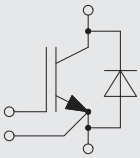
GD600SGL170C2S	1700	600	2.40	388.0	0.040	C2.1/35	
Trench FS IGBT,Low Loss							
GD400SGX170C2S	1700	400	1.85	304.0	0.062	C2.1/35	
GD600SGX170C2S	1700	600	1.85	333.0	0.041	C2.1/35	
1700V Half Bridge							
SPT+ Low Loss and Fast IGBT							
GD50HFL170C1S	1700	50	2.40	33.0	0.339	C1.0/35	
GD75HFL170C1S	1700	75	2.40	47.6	0.262	C1.0/35	
GD100HFL170C1S	1700	100	2.40	56.8	0.217	C1.0/35	
GD100HFL170C2S	1700	100	2.40	63.3	0.217	C2.0/35	
GD150HFL170C2S	1700	150	2.40	101.0	0.133	C2.0/35	
GD200HFL170C2S	1700	200	2.40	152.1	0.108	C2.0/35	
GD300HFL170C2S	1700	300	2.40	211.7	0.081	C2.0/35	
GD400HFL170C2S	1700	400	2.40	167.7	0.054	C2.0/35	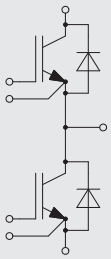
Trench FS IGBT,Low Loss							
GD50HFX170C1S	1700	50	1.85	31.3	0.358	C1.0/35	
GD75HFX170C1S	1700	75	1.85	51.0	0.268	C1.0/35	
GD100HFX170C1S	1700	100	1.85	62.4	0.237	C1.0/35	
GD100HFX170C2S	1700	100	1.85	62.4	0.237	C2.0/35	
GD150HFX170C2S	1700	150	1.85	113.7	0.133	C2.0/35	
GD200HFX170C2S	1700	200	1.85	143.7	0.118	C2.0/35	
GD300HFX170C2S	1700	300	1.85	195.8	0.082	C2.0/35	
GD400HFX170C2S	1700	400	1.85	304.0	0.062	C2.0/35	

Medium Power Modules

Type	V_{CES} V	I_C A	$V_{CE(sat)}$ @T_j=25℃ typ. V	(E_{on}+E_{off}) @T_j=125℃ typ. mJ	$R_{th(J-C)}$ K/W	Package Outline/page	Circuit
650V Half Bridge							
Trench FS IGBT,Low Loss							
GD300HFX65C6S	650	300	1.45	12.7	0.148	C6.1/35	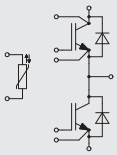
GD450HFX65C6S	650	450	1.45	20.3	0.116	C6.1/35	
GD600HFX65C6S	650	600	1.45	29.9	0.091	C6.1/35	
GD300HFX65C6H	650	300	1.45	12.7	0.157	C6.12/36	
GD450HFX65C6H	650	450	1.45	20.3	0.116	C6.12/36	
GD600HFX65C6H	650	600	1.45	29.9	0.091	C6.12/36	
650V Half NPC1 Up							
Trench FS IGBT,Low Loss							
GD300MPX65C6S	650	300	1.45	12.7	0.157	C6.1/35	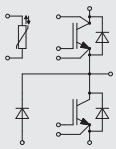
GD400MPX65C6S	650	400	1.45	16.2	0.121	C6.1/35	
650V Half NPC1 Low							
Trench FS IGBT,Low Loss							
GD300MNX65C6S	650	300	1.45	12.7	0.157	C6.1/35	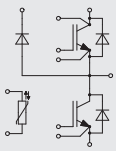
GD400MNX65C6S	650	400	1.45	16.2	0.121	C6.1/35	
650V 3 Phase Bridge with NTC							
Trench FS IGBT,Low Loss							
GD200FFX65P3S	650	200	1.45	8.1	0.200	P3.0/37	
GD300FFX65P3S	650	300	1.45	12.7	0.168	P3.0/37	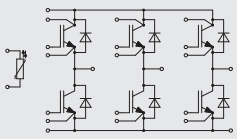
GD400FFX65P3S	650	400	1.45	16.2	0.122	P3.0/37	
GD200FFX65P3H	650	200	1.45	8.1	0.400	P3.1/37	
GD300FFX65P3H	650	300	1.45	12.7	0.257	P3.1/37	
GD400FFX65P3H	650	400	1.45	16.2	0.200	P3.1/37	
650V Tri-Pack							
Trench FS IGBT,Low Loss							
GD600HTX65P4S	650	600	1.45	22.7	0.120	P4.0/37	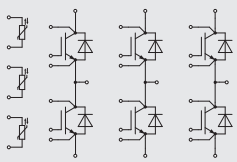
GD800HTX65P4S	650	800	1.45	28.0	0.100	P4.0/37	

Medium Power Modules

Type	V_{CES} V	I_C A	$V_{CE(sat)}$ @T_j=25℃ typ. V	(E_{on}+E_{off}) @T_j=125℃ typ. mJ	$R_{th(J-C)}$ K/W	Package Outline/page	Circuit
1200V Half Bridge							
Advanced Trench FS IGBT,Low Loss							
GD150HFY120C6S	1200	150	1.70	26.1	0.136	C6.1/35	
GD225HFY120C6S	1200	225	1.70	40.7	0.122	C6.1/35	
GD300HFY120C6S	1200	300	1.70	57.1	0.093	C6.1/35	
GD450HFY120C6S	1200	450	1.70	89.8	0.069	C6.1/35	
GD600HFY120C6S	1200	600	1.70	96.0	0.038	C6.1/35	
GD150HFY120C6H	1200	150	1.70	26.1	0.136	C6.12/36	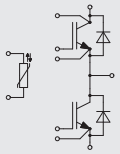
GD225HFY120C6H	1200	225	1.70	40.7	0.122	C6.12/36	
GD300HFY120C6H	1200	300	1.70	57.1	0.093	C6.12/36	
GD450HFY120C6H	1200	450	1.70	89.8	0.069	C6.12/36	
GD600HFY120C6H	1200	600	1.70	96.0	0.038	C6.12/36	
NPT Ultra Fast IGBT							
GD150HFU120C6S	1200	150	3.10	23.7	0.106	C6.1/35	
GD225HFU120C6S	1200	225	3.10	33.0	0.078	C6.1/35	
GD300HFU120C6S	1200	300	3.10	32.7	0.066	C6.1/35	
1200V Half NPC1 Up							
Advanced Trench FS IGBT,Low Loss							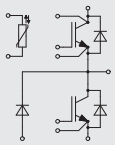
GD300MPY120C6S	1200	300	1.70	57.1	0.093	C6.1/35	
1200V Half NPC1 Low							
Advanced Trench FS IGBT,Low Loss							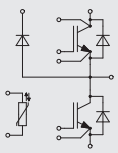
GD300MNY120C6S	1200	300	1.70	57.1	0.093	C6.1/35	
1200V Tri-Pack							
Advanced Trench FS IGBT,Low Loss							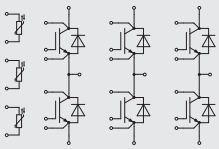
GD400HTY120P4S	1200	400	1.70	46.4	0.110	P4.0/37	

Medium Power Modules

Type	V_{CES} V	I_C A	$V_{CE(sat)}$ @T_j=25℃ typ. V	(E_{on}+E_{off}) @T_j=125℃ typ. mJ	$R_{th(J-C)}$ K/W	Package Outline/page	Circuit
1700V Half Bridge							
SPT+ Low Loss and Fast IGBT							
GD150HFL170C6S	1700	150	2.40	101.0	0.117	C6.1/35	
GD225HFL170C6S	1700	225	2.40	164.5	0.091	C6.1/35	
GD300HFL170C6S	1700	300	2.40	205.0	0.074	C6.1/35	
GD450HFL170C6S	1700	450	2.40	286.0	0.046	C6.1/35	
GD600HFL170C6S	1700	600	2.40	371.0	0.035	C6.1/35	
Trench FS IGBT,Low Loss							
GD150HFX170C6S	1700	150	1.85	113.7	0.134	C6.1/35	
GD225HFX170C6S	1700	225	1.85	157.0	0.113	C6.1/35	
GD300HFX170C6S	1700	300	1.85	212.0	0.082	C6.1/35	
GD450HFX170C6S	1700	450	1.85	323.0	0.059	C6.1/35	
GD600HFX170C6S	1700	600	1.85	434.0	0.045	C6.1/35	

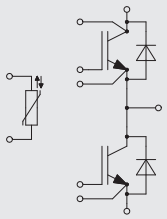

Medium Power Module Package Outlines

Case C1.0

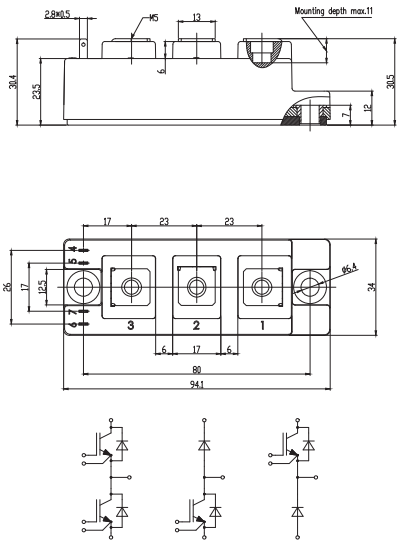

Case C2.0

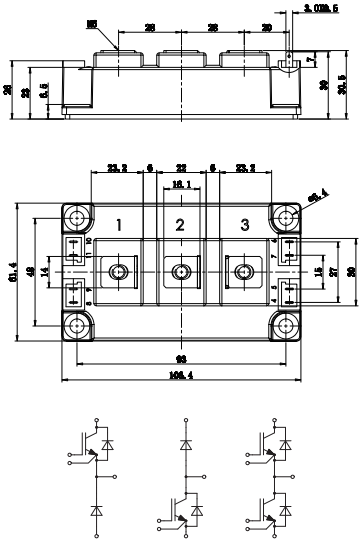

Case C2.1

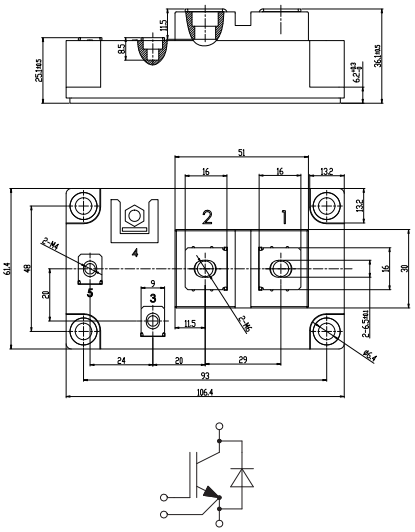

Case C6.1

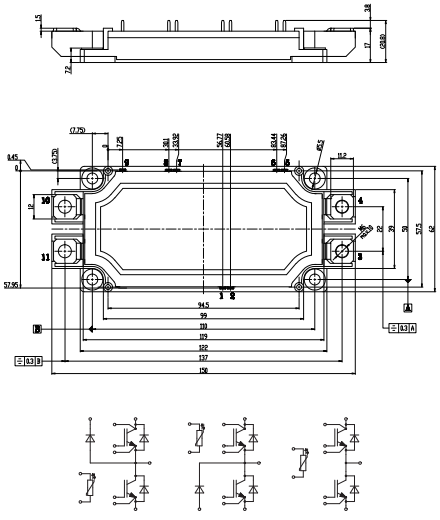

Medium Power Module Package Outlines

Case C6.12

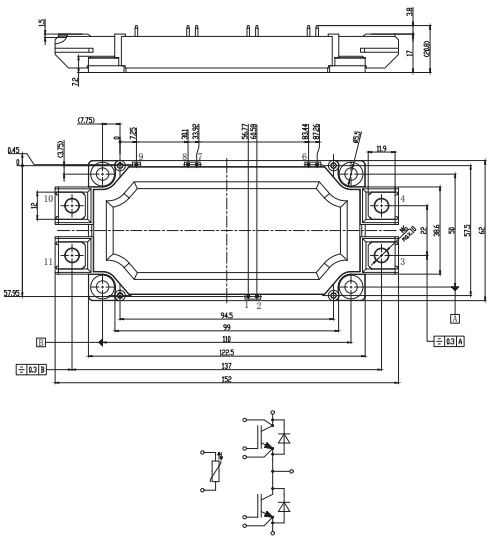

Case C8.0

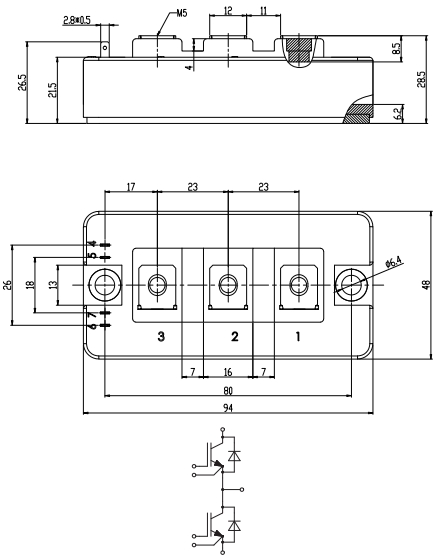

Case C8.1

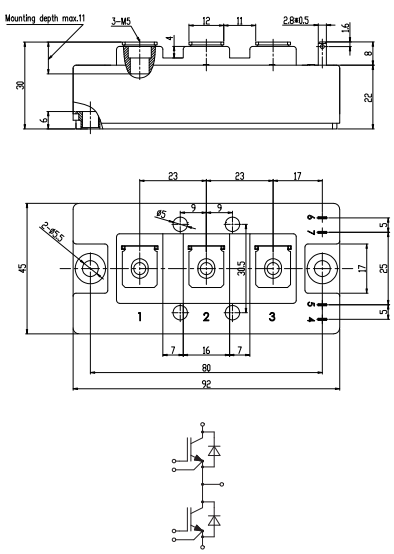

Case C8.2

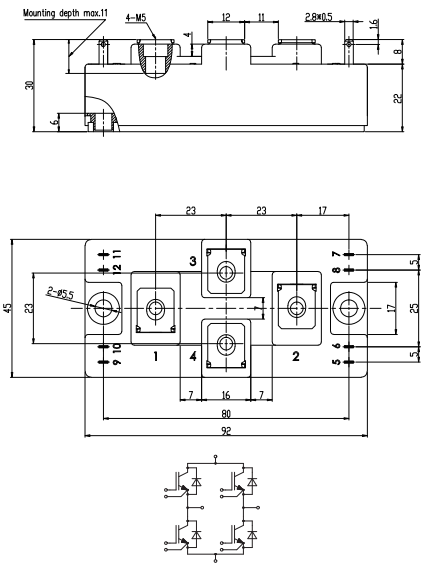

Medium Power Module Package Outlines

Case P3.0

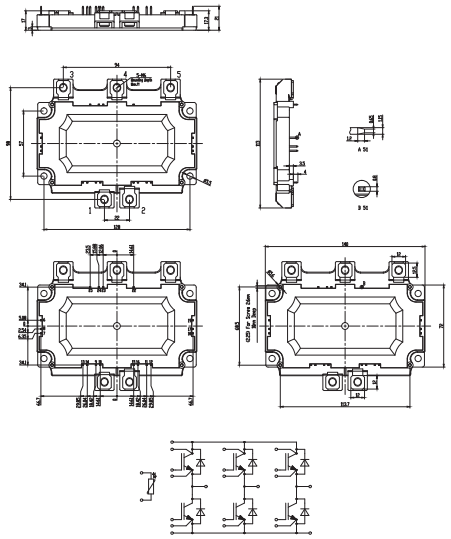

Case P3.1

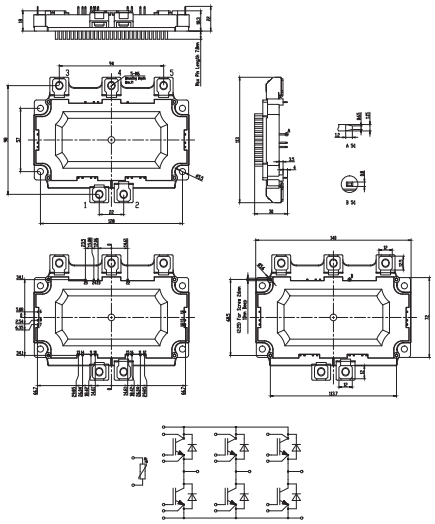

Case P4.0

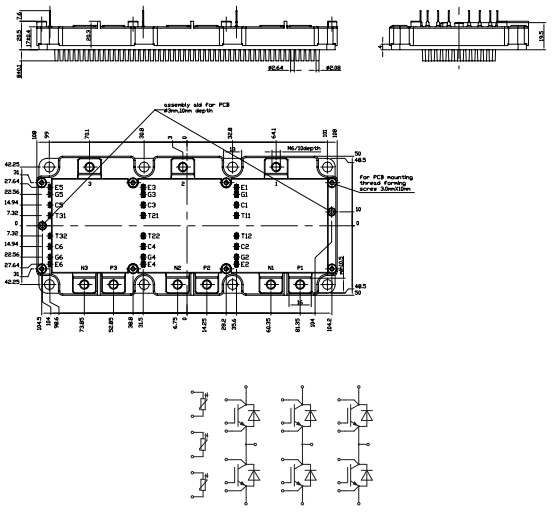

High Power Modules

Type	V_{CES} V	I_C A	$V_{CE(sat)}$ @T_j=25℃ typ. V	(E_{on}+E_{off}) @T_j=125℃ typ. mJ	$R_{th(J-C)}$ K/W	Package Outline/page	Circuit
1200V Single							
Advanced Trench FS IGBT,Low Loss							
GD800SGY120C3S	1200	800	1.70	154	0.028	C3.0/40	
GD1200SGY120C3S	1200	1200	1.70	387	0.020	C3.0/40	
GD1600SGY120C3S	1200	1600	1.70	573	0.015	C3.0/40	
GD2400SGY120C3S	1200	2400	1.70	945	0.011	C3.0/40	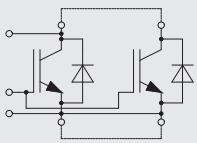
GD800SGY120C3SN	1200	800	1.70	154	0.028	C3.2/40	
GD1200SGY120C3SN	1200	1200	1.70	387	0.020	C3.2/40	
GD1600SGY120C3SN	1200	1600	1.70	573	0.015	C3.2/40	
GD2400SGY120C3SN	1200	2400	1.70	945	0.011	C3.2/40	
GD2400SGY120C4S	1200	2400	1.70	945	0.011	C4.0/40	
GD3600SGY120C4S	1200	3600	1.70	1377	0.008	C4.0/40	
1200V Half Bridge with NTC							
Trench FS IGBT,Low Loss							
GD450HFY120P1S	1200	450	1.70	103	0.058	P1.0/41	
GD600HFY120P1S	1200	600	1.70	124	0.045	P1.0/41	
GD900HFY120P1S	1200	900	1.70	240	0.029	P1.0/41	
GD1400HFY120P2S	1200	1400	1.70	331	0.019	P2.0/41	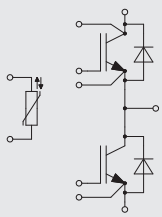
1200V Half Bridge							
Advanced Trench FS IGBT,Low Loss							
GD600HFY120C3S	1200	600	1.70	96	0.044	C3.1/40	
GD800HFY120C3S	1200	800	1.70	174	0.032	C3.1/40	
GD1200HFY120C3S	1200	1200	1.70	439	0.025	C3.1/40	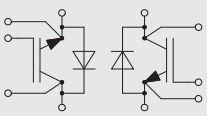
1700V Single							
SPT+ Low Loss and Fast IGBT							
GD800SGL170C3S	1700	800	2.40	512	0.021	C3.0/40	
GD1200SGL170C3S	1700	1200	2.40	674	0.017	C3.0/40	
GD1600SGL170C3S	1700	1600	2.40	1070	0.013	C3.0/40	
GD2400SGL170C3S	1700	2400	2.40	1580	0.010	C3.0/40	
GD800SGL170C3SN	1700	800	2.40	512	0.021	C3.2/40	
GD1200SGL170C3SN	1700	1200	2.40	674	0.017	C3.2/40	
GD1600SGL170C3SN	1700	1600	2.40	1070	0.013	C3.2/40	
GD2400SGL170C3SN	1700	2400	2.40	1580	0.010	C3.2/40	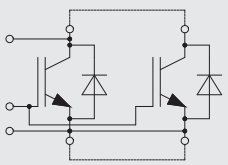

High Power Modules

Type	V_{CES} V	I_C A	$V_{CE(sat)}$ @T_j=25℃ typ. V	(E_{on}+E_{off}) @T_j=125℃ typ. mJ	$R_{th(J-C)}$ K/W	Package Outline/page	Circuit
GD2400SGL170C4S	1700	2400	2.40	1580	0.009	C4.0/40	
GD3600SGL170C4S	1700	3600	2.40	2328	0.006	C4.0/40	
Trench FS IGBT,Low Loss							
GD800SGX170C3S	1700	800	1.85	605	0.026	C3.0/40	
GD1200SGX170C3S	1700	1200	1.85	867	0.019	C3.0/40	
GD1600SGX170C3S	1700	1600	1.85	1190	0.015	C3.0/40	
GD2400SGX170C3S	1700	2400	1.85	1554	0.011	C3.0/40	
GD800SGX170C3SN	1700	800	1.85	605	0.026	C3.2/40	
GD1200SGX170C3SN	1700	1200	1.85	867	0.019	C3.2/40	
GD1600SGX170C3SN	1700	1600	1.85	1190	0.015	C3.2/40	
GD2400SGX170C3SN	1700	2400	1.85	1554	0.011	C3.2/40	
GD2400SGX170C4S	1700	2400	1.85	1554	0.010	C4.0/40	
GD3600SGX170C4S	1700	3600	1.85	2698	0.007	C4.0/40	

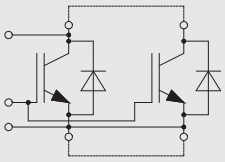

1700V Half Bridge with NTC

SPT+ Low Loss and Fast IGBT							
GD650HFL170P1S	1700	650	2.40	505	0.035	P1.0/41	
GD1000HFL170P2S	1700	1000	2.40	590	0.023	P2.0/41	
Trench FS IGBT,Low Loss							
GD450HFX170P1S	1700	450	1.85	379	0.055	P1.0/41	
GD650HFX170P1S	1700	600	1.85	563	0.038	P1.0/41	
GD1000HFX170P2S	1700	1000	1.85	763	0.025	P2.0/41	
GD1400HFX170P2S	1700	1400	1.85	1250	0.016	P2.0/41	

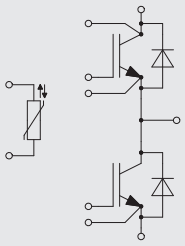

1700V Half Bridge

SPT+ Low Loss and Fast IGBT							
GD600HFL170C3S	1700	600	2.40	371	0.033	C3.1/40	
GD800HFL170C3S	1700	800	2.40	512	0.026	C3.1/40	
GD1200HFL170C3S	1700	1200	2.40	674	0.022	C3.1/40	
Trench FS IGBT,Low Loss							
GD600HFX170C3S	1700	600	1.85	434	0.034	C3.1/40	
GD800HFX170C3S	1700	800	1.85	605	0.031	C3.1/40	
GD1200HFX170C3S	1700	1200	1.85	867	0.024	C3.1/40	

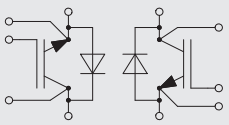

High Power Module Package Outlines

Case C3.0

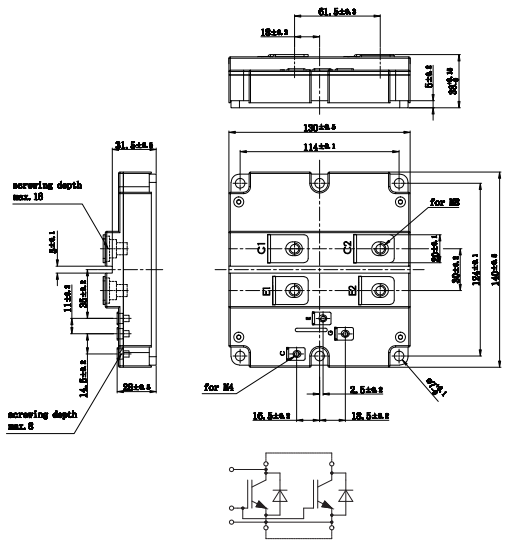

Case C3.1

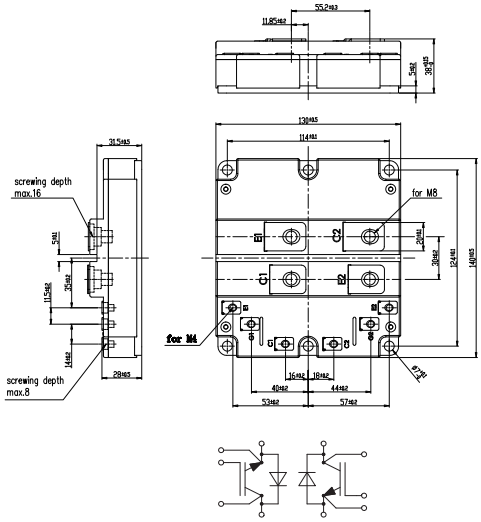

Case C3.2

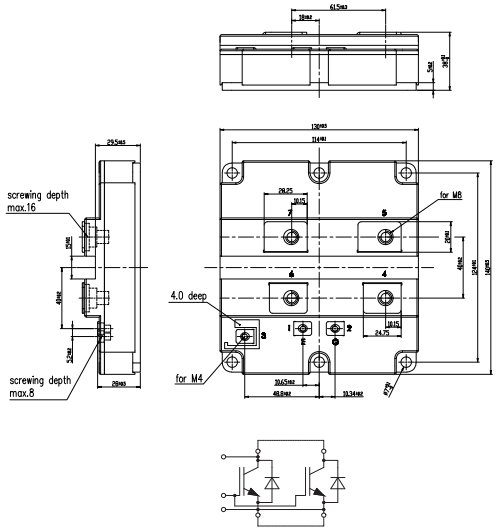

Case C4.0

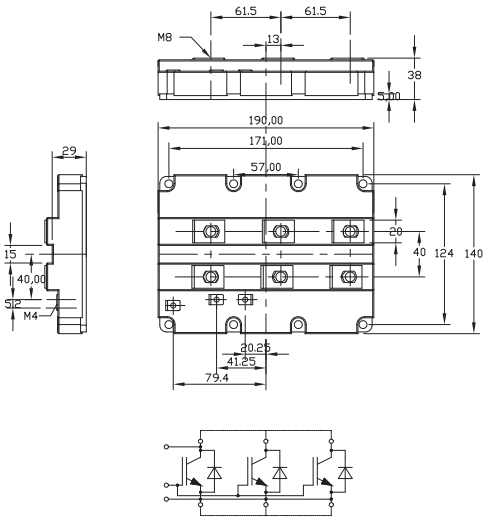

High Power Module Package Outlines

Case P1.0

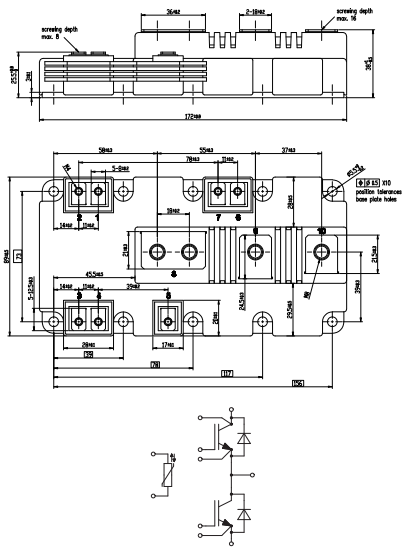

Case P2.0

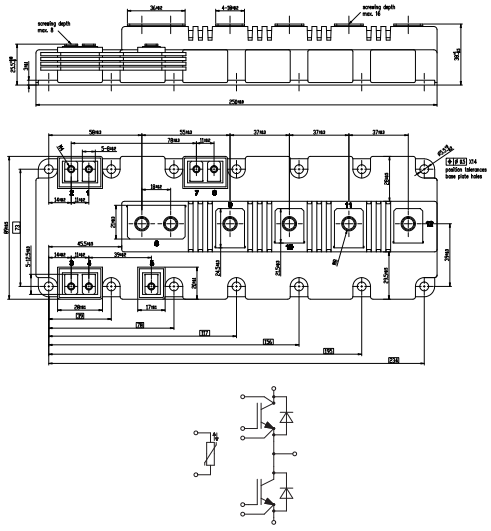

SiC Mosfet Modules
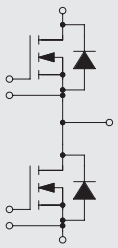
Type	V_{DSS} V	I_D A	$R_{DS(on)}$ @T_j=25°C max. mOhm	$R_{th(J-C)}$ K/W	Package Outline/page	Circuit
SiC Mosfet						
MD120HFR120C2S	1200	120	13	0.181	C2.0/43	
MD300HFR120C2S	1200	300	6.5	0.100	C2.0/43	
MD400HFR120C2S	1200	400	4.4	0.074	C2.0/43	
MD200HFR170C2S	1700	200	8.7	0.058	C2.0/43	
MD250HFR170C2S	1700	250	10.4	0.069	C2.0/43	
MD120HFR120B3S	1200	120	13	0.181	B3.7/43	
MD300HFR120B3S	1200	300	6.5	0.100	B3.7/43	
MD400HFR120B3S	1200	400	4.4	0.074	B3.7/43	
MD200HFR170B3S	1700	200	8.7	0.058	B3.7/43	
MD250HFR170B3S	1700	250	10.4	0.069	B3.7/43